ENGINEERING DRAWINGS

Team Name: EIMMORTALS

Team ID: 262045

Team Captain: Abhinav Verma

Authors: Aditya Tyagi, Sach Saxena

RELAY CASING

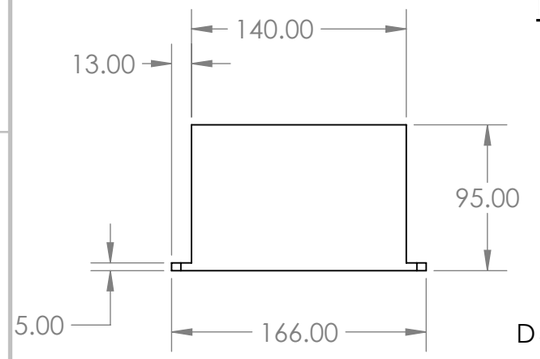

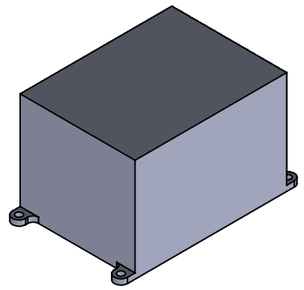

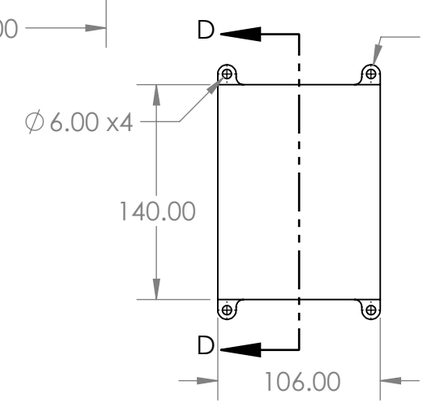

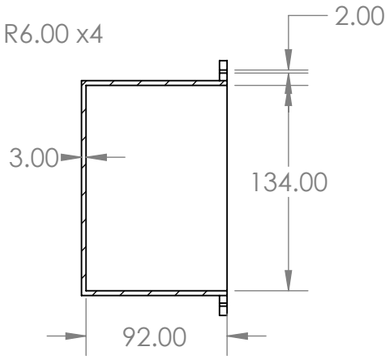

SECTION D-D
SCALE 1 : 4

PCB CASING

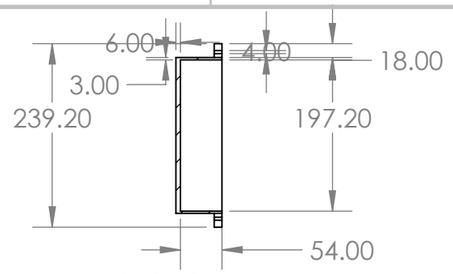

SECTION A-A
SCALE 1 : 8

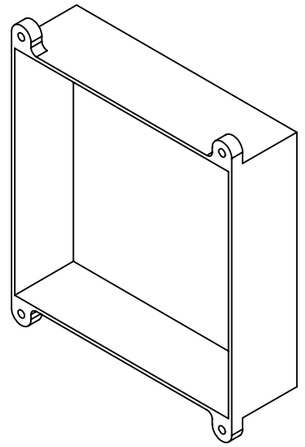

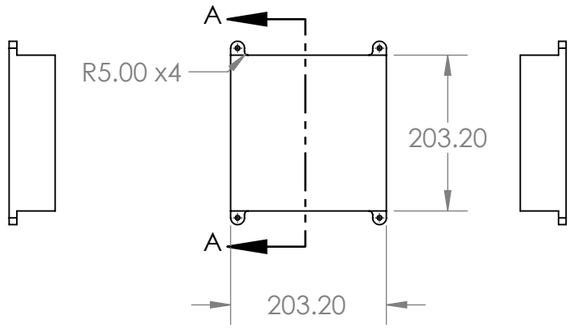

PCB Plate

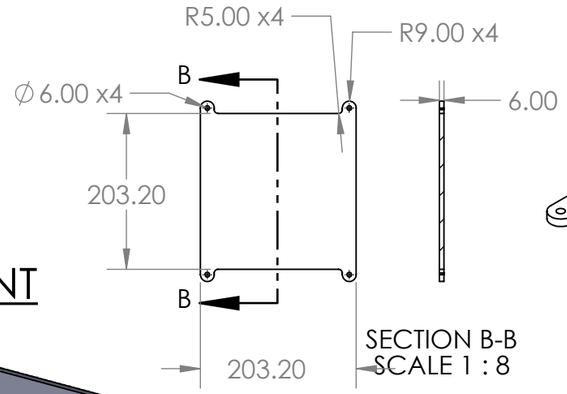

SECTION B-B
SCALE 1 : 8

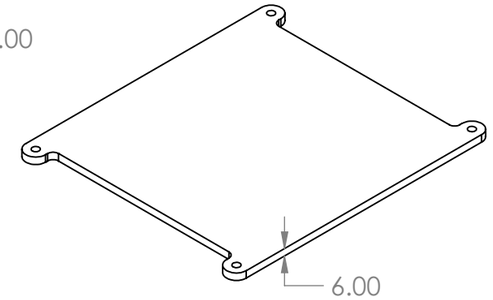

RELAY PLATE

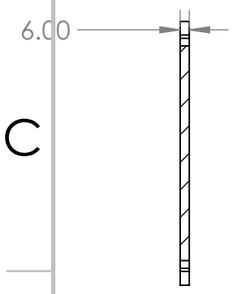

SECTION E-E
SCALE 1 : 4

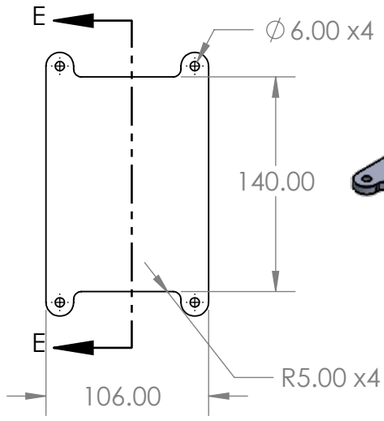

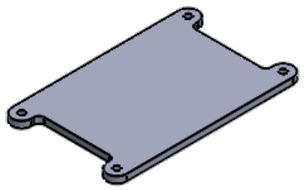

BMS DISPLAY MOUNT

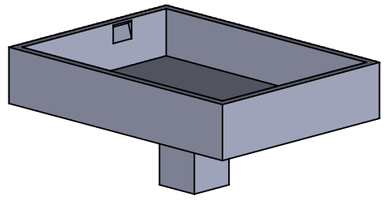

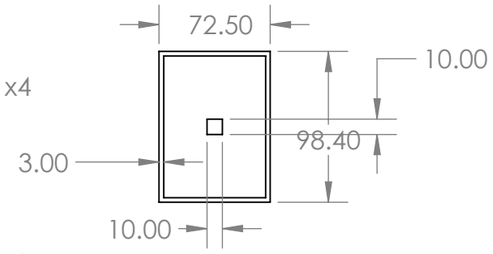

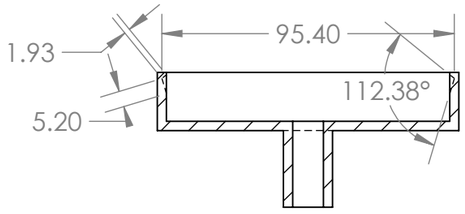

SECTION F-F

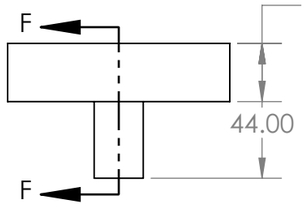

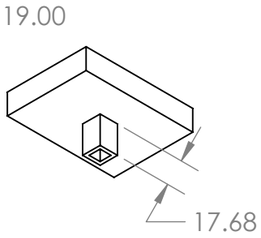

UNLESS OTHERWISE SPECIFIED: DIMENSIONS ARE IN MILLIMETERS SURFACE FINISH: TOLERANCES: LINEAR: ANGULAR:	FINISH:		DEBURR AND BREAK SHARP EDGES	DO NOT SCALE DRAWING	REVISION
	NAME	SIGNATURE	DATE	TITLE: 3D Printed parts-A	
DRAWN					
CHK'D					
APPV'D					
MFG					
Q.A			MATERIAL:	DWG NO.	A3
			WEIGHT:	SCALE:1:2	SHEET 1 OF 1

SOLIDWORKS Educational Product. For Instructional Use Only.

TSAL MOUNT

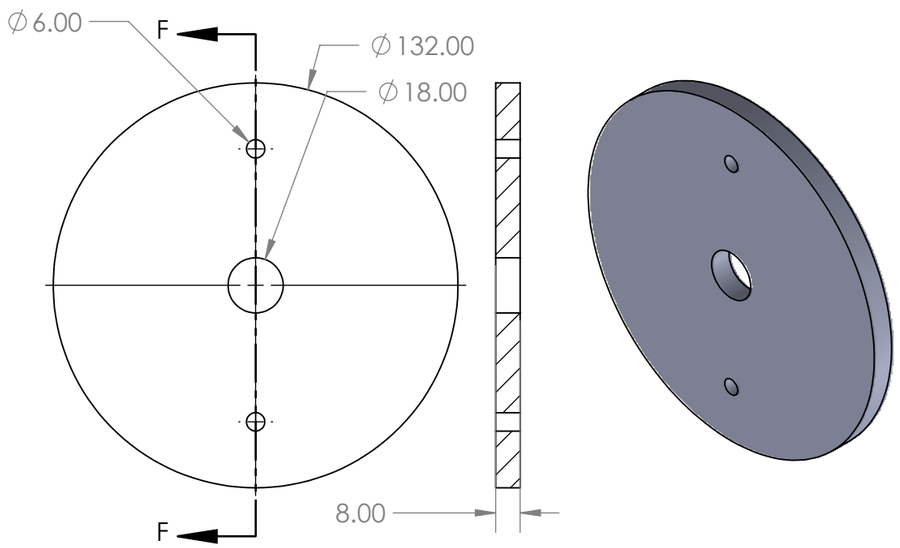

SECTION F-F
SCALE 1 : 2

ANTI-SUBMARINE

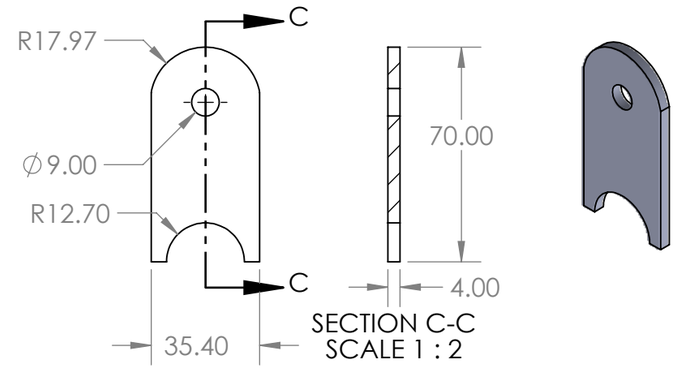

SECTION C-C
SCALE 1 : 2

25.4 mm Dia knuckles

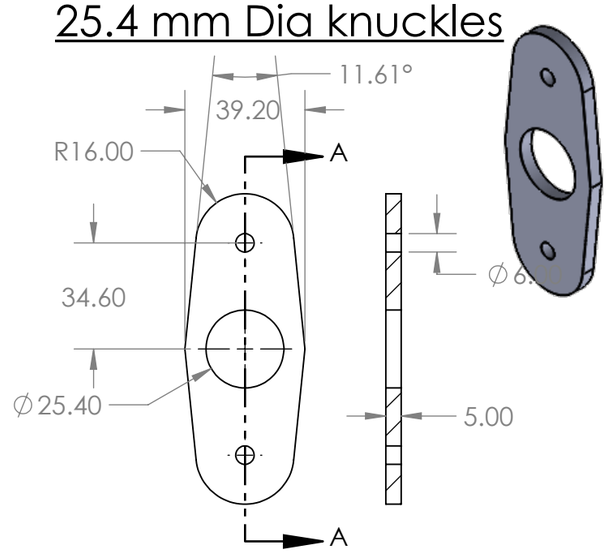

SECTION A-A
SCALE 1 : 2

TOE HITCH POINT

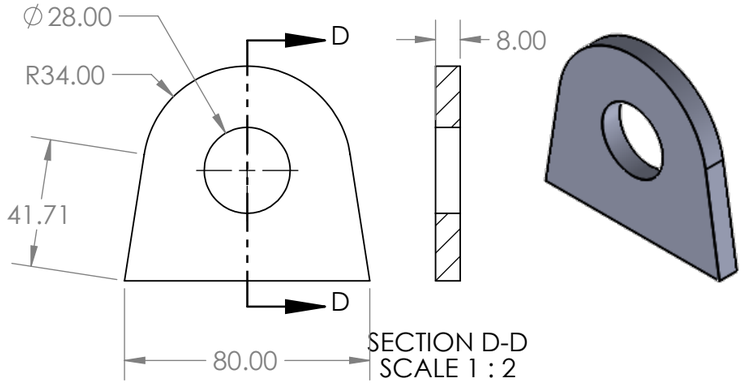

SECTION D-D
SCALE 1 : 2

29.2 mm Dia knuckle

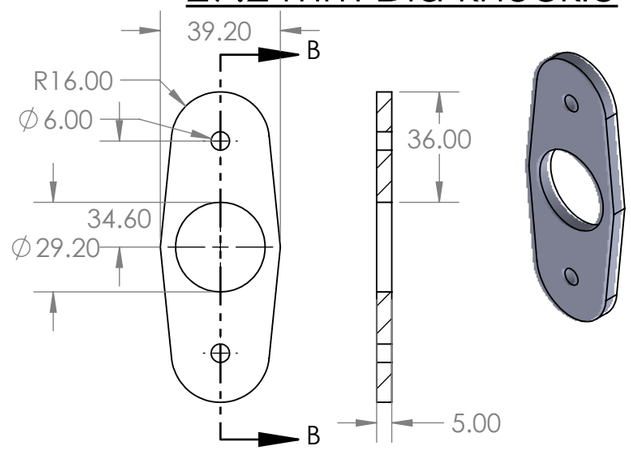

SECTION B-B
SCALE 1 : 2

Suspension Arm Mount

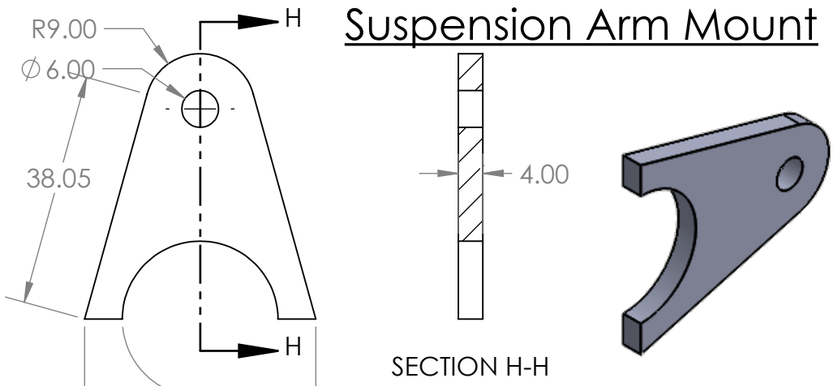

SECTION H-H

Seat Belt Mount

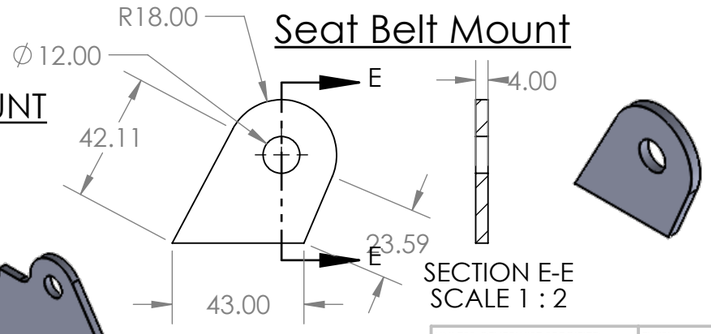

SECTION E-E
SCALE 1 : 2

Throttle PEDAL MOUNT

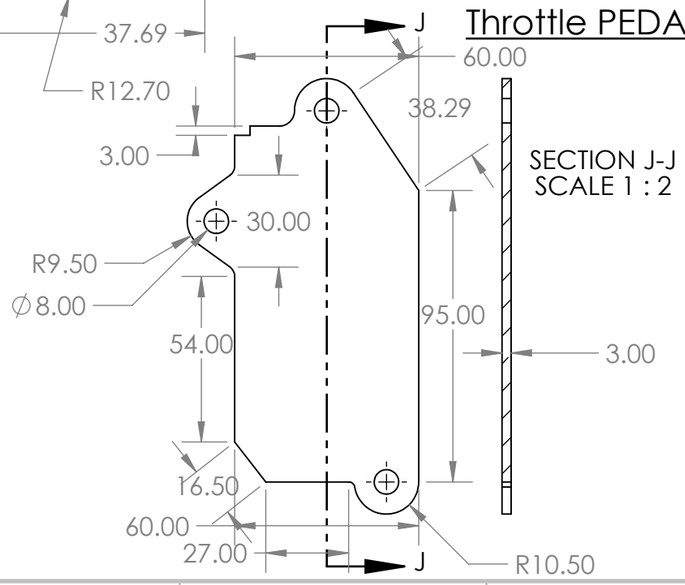

SECTION J-J
SCALE 1 : 2

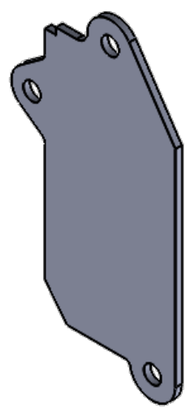

UNLESS OTHERWISE SPECIFIED: DIMENSIONS ARE IN MILLIMETERS SURFACE FINISH: TOLERANCES: LINEAR: ANGULAR:	FINISH:		DEBURR AND BREAK SHARP EDGES	DO NOT SCALE DRAWING	REVISION	
	NAME	SIGNATURE	DATE	TITLE: Mountings and Msc.		
DRAWN						
CHK'D						
APPV'D						
MFG						
Q.A				MATERIAL:	DWG NO.	A3
				WEIGHT:	SCALE:1:1	SHEET 1 OF 1

SOLIDWORKS Educational Product. For Instructional Use Only.

MOTOR MOUNTING ASSEMBLED

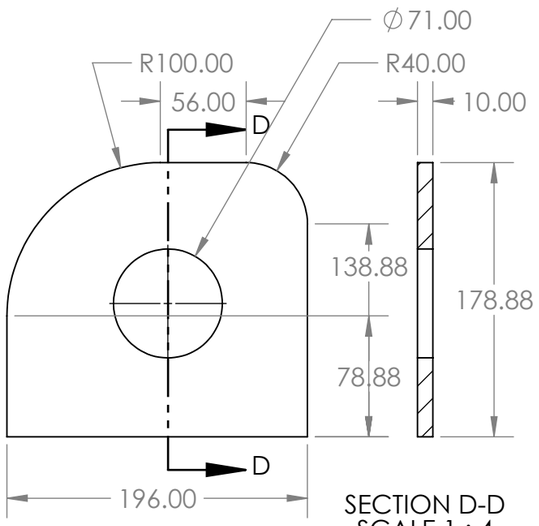

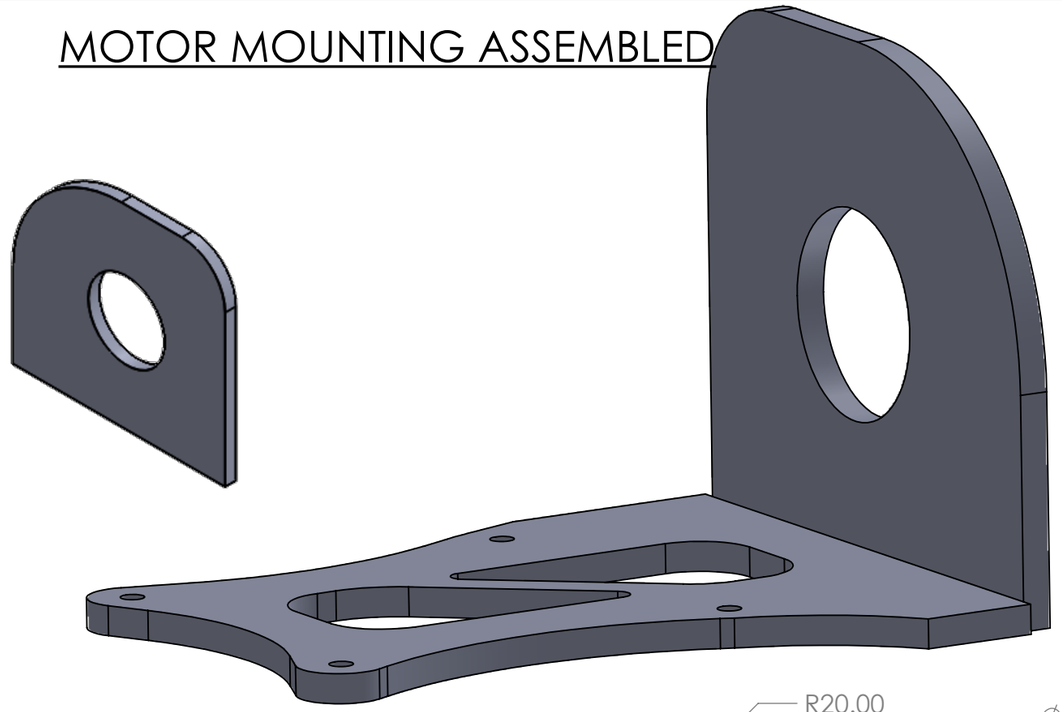

Suspension Mount (Rear)

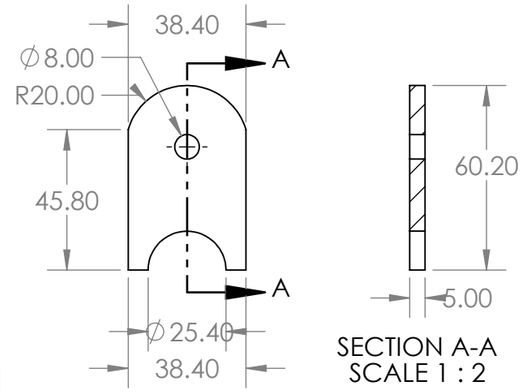

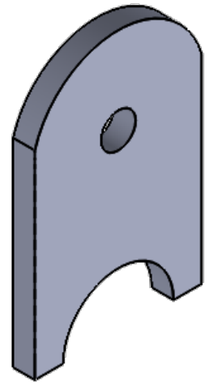

Suspension Mount (front)

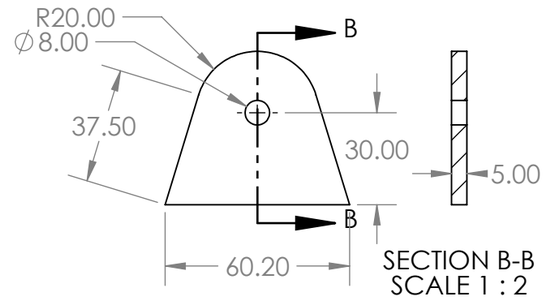

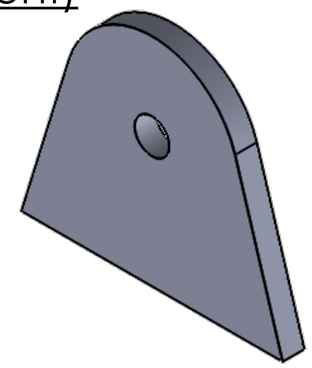

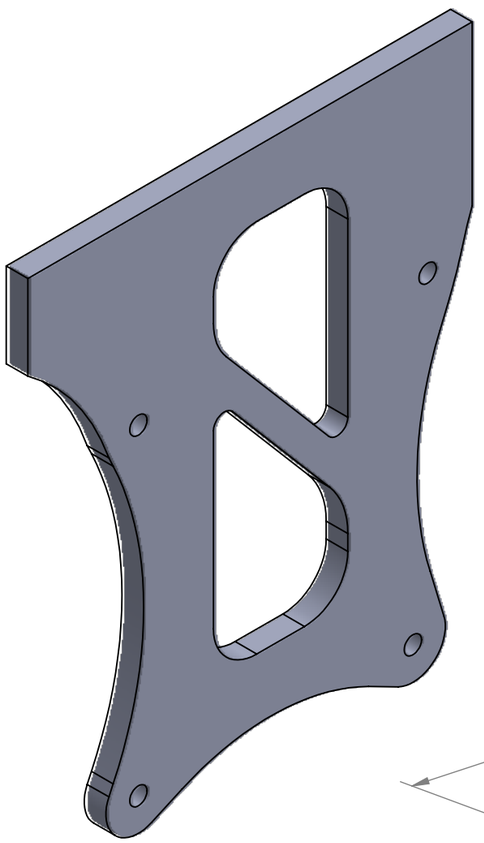

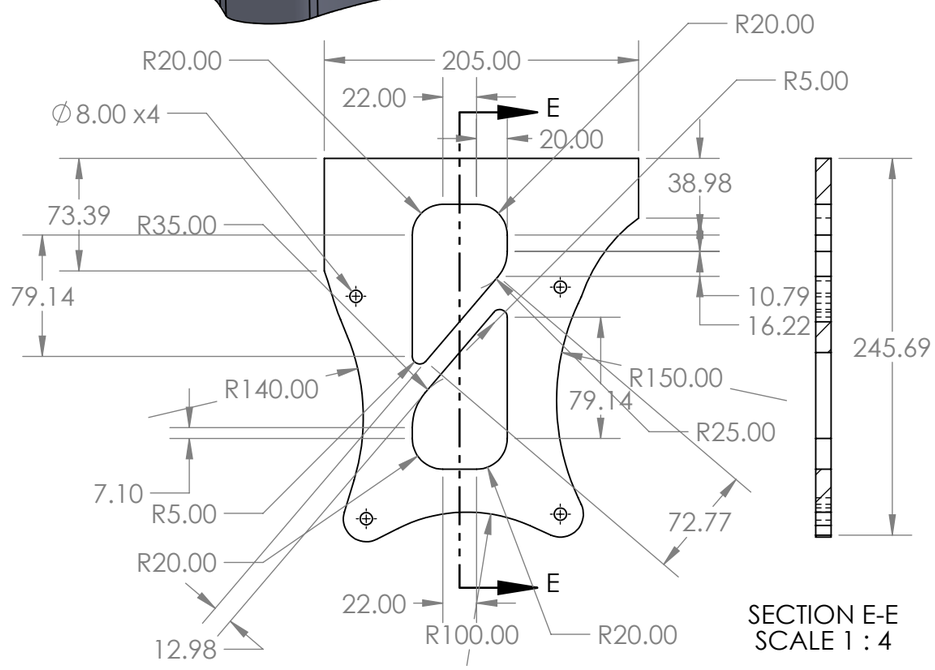

Steering Collar

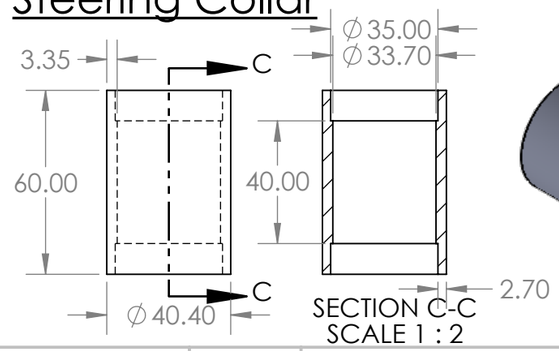

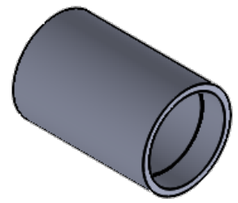

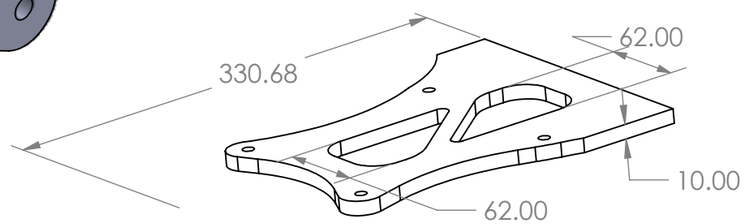

UNLESS OTHERWISE SPECIFIED: DIMENSIONS ARE IN MILLIMETERS SURFACE FINISH: TOLERANCES: LINEAR: ANGULAR:	FINISH:		DEBURR AND BREAK SHARP EDGES	DO NOT SCALE DRAWING	REVISION	
	NAME	SIGNATURE	DATE	TITLE: Mountings		
DRAWN						
CHK'D						
APPV'D						
MFG						
Q.A			MATERIAL:	DWG NO.		A3
			WEIGHT:	SCALE:2:1	SHEET 1 OF 1	

SOLIDWORKS Educational Product. For Instructional Use Only.

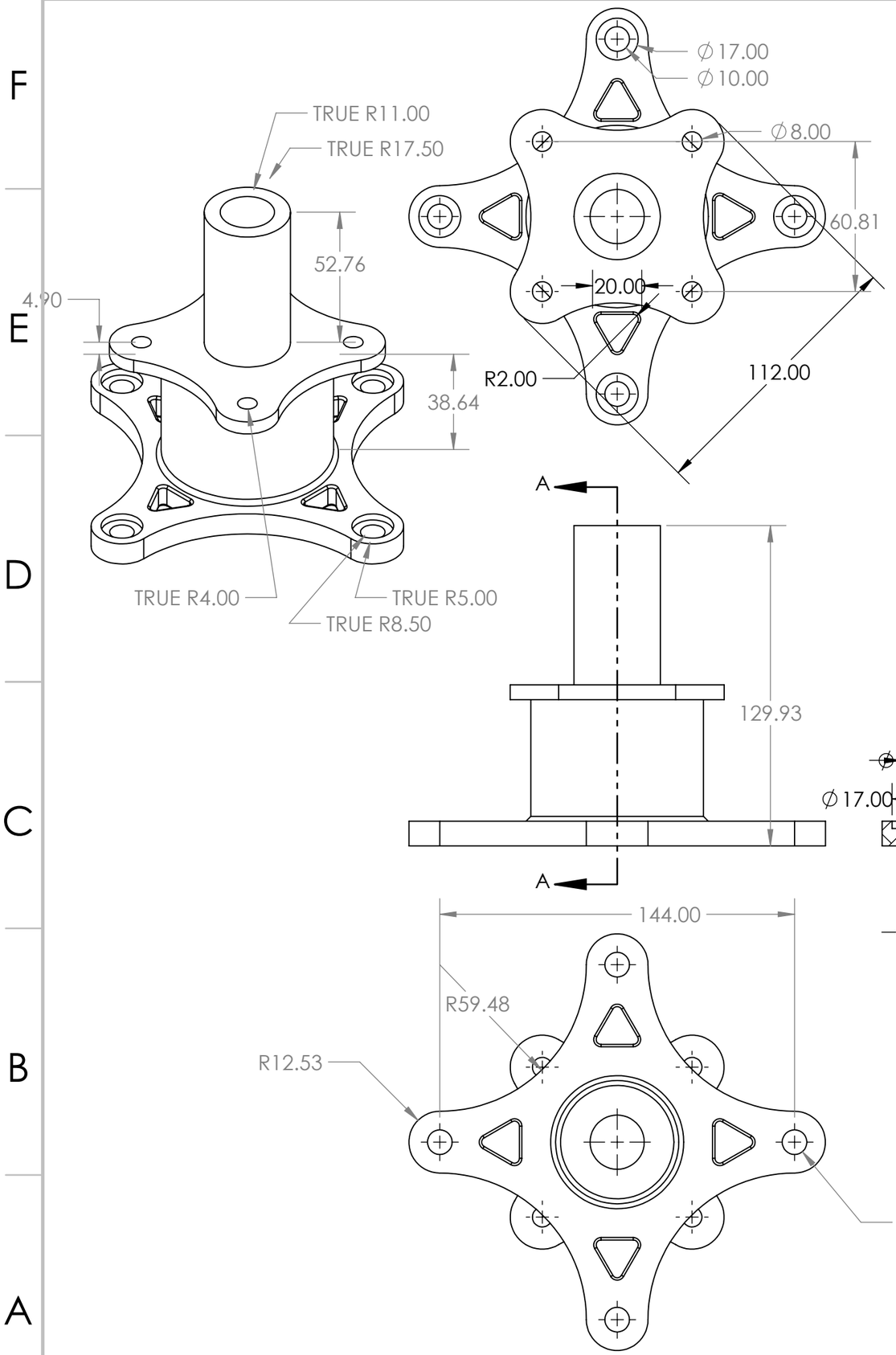

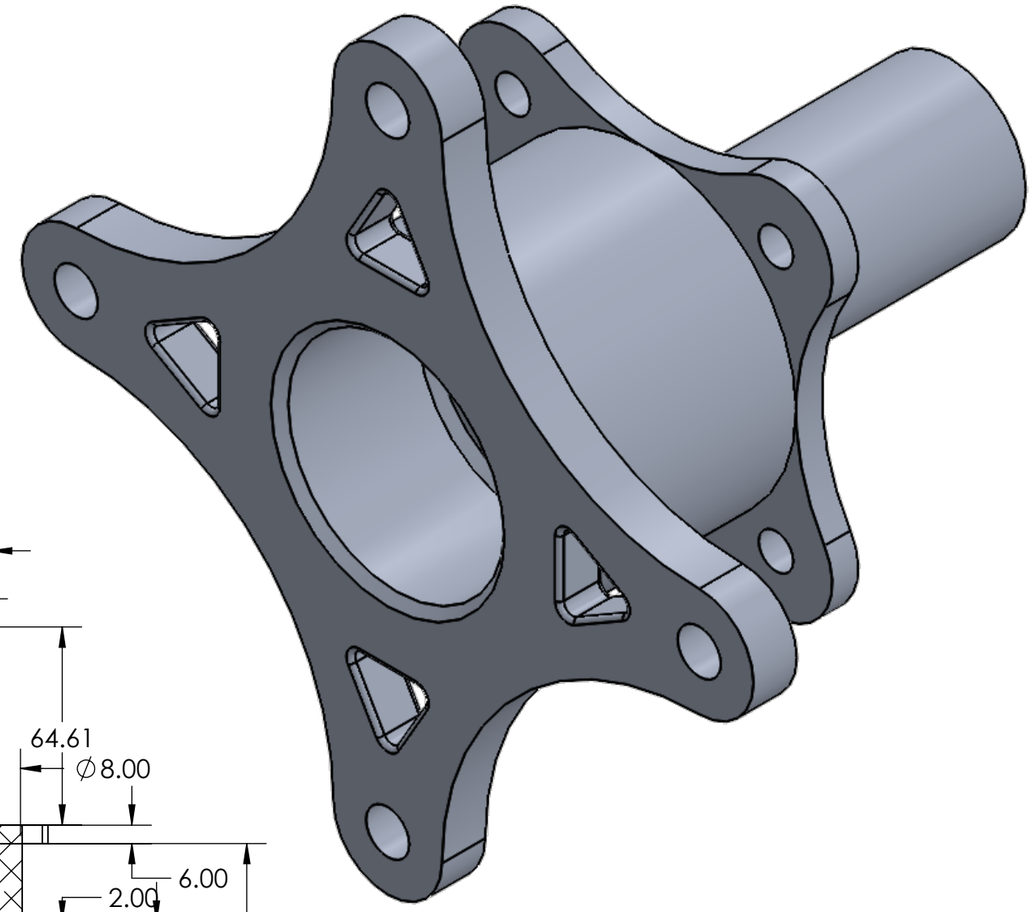

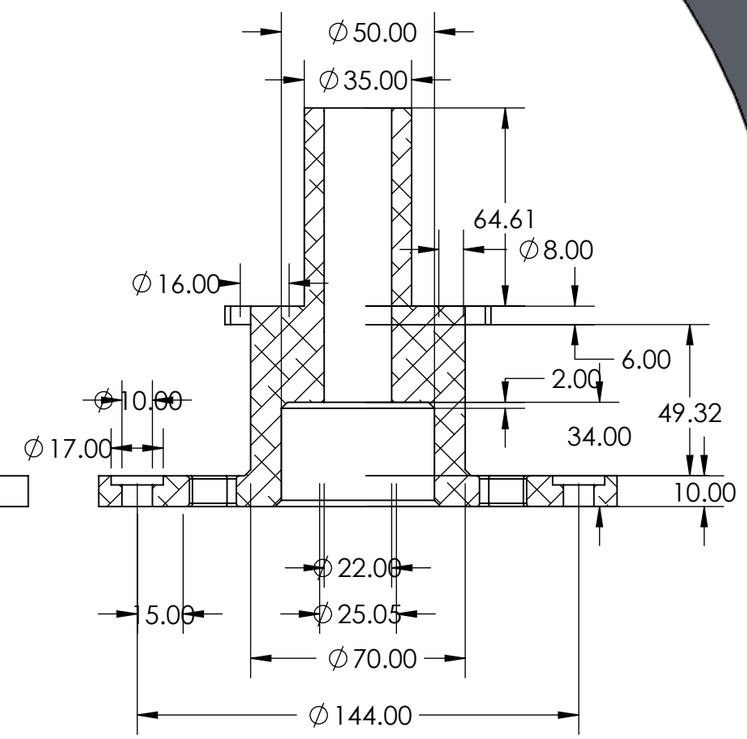

SECTION A-A

UNLESS OTHERWISE SPECIFIED: DIMENSIONS ARE IN MILLIMETERS SURFACE FINISH: TOLERANCES: LINEAR: ANGULAR:	FINISH:		DEBURR AND BREAK SHARP EDGES	DO NOT SCALE DRAWING	REVISION	
	NAME	SIGNATURE	DATE	TITLE:		
DRAWN						
CHK'D						
APPV'D						
MFG						
Q.A			MATERIAL:	DWG NO. Front Rotor		A3
			WEIGHT:	SCALE:1:2	SHEET 1 OF 1	

SOLIDWORKS Educational Product. For Instructional Use Only.

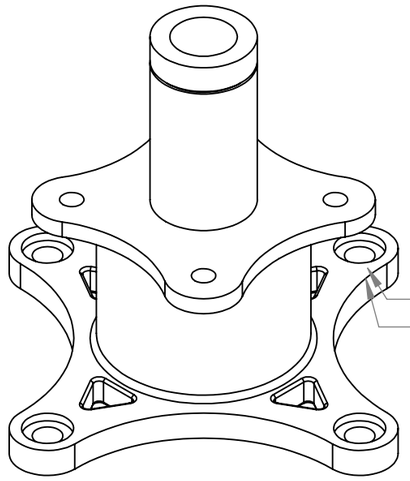

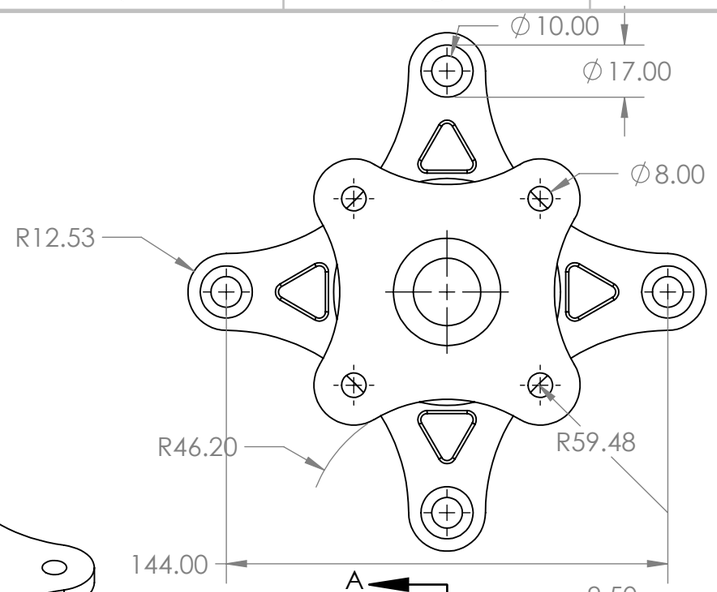

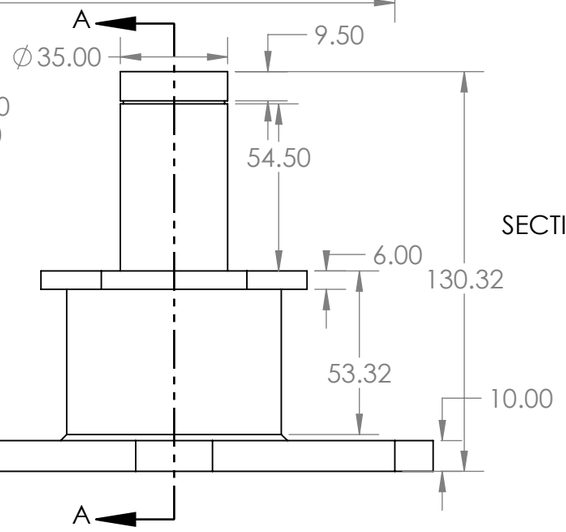

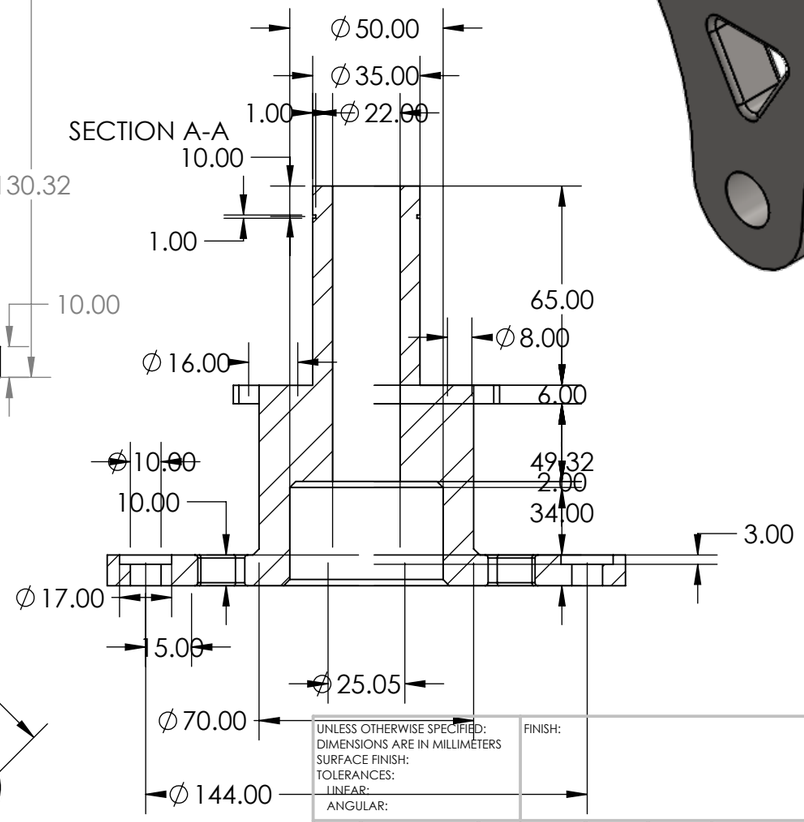

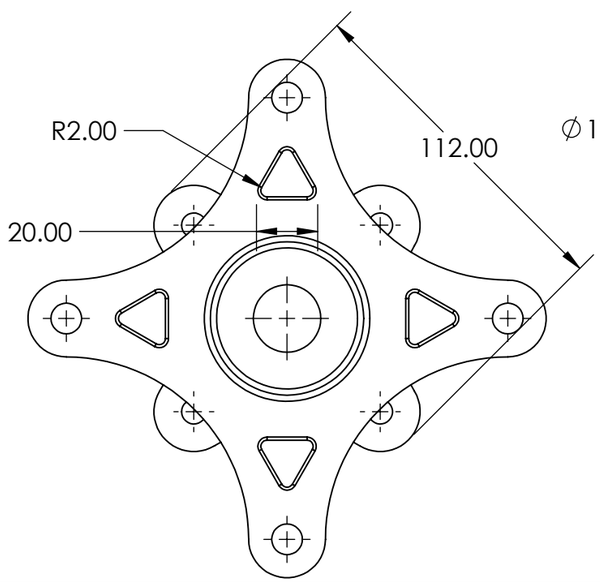

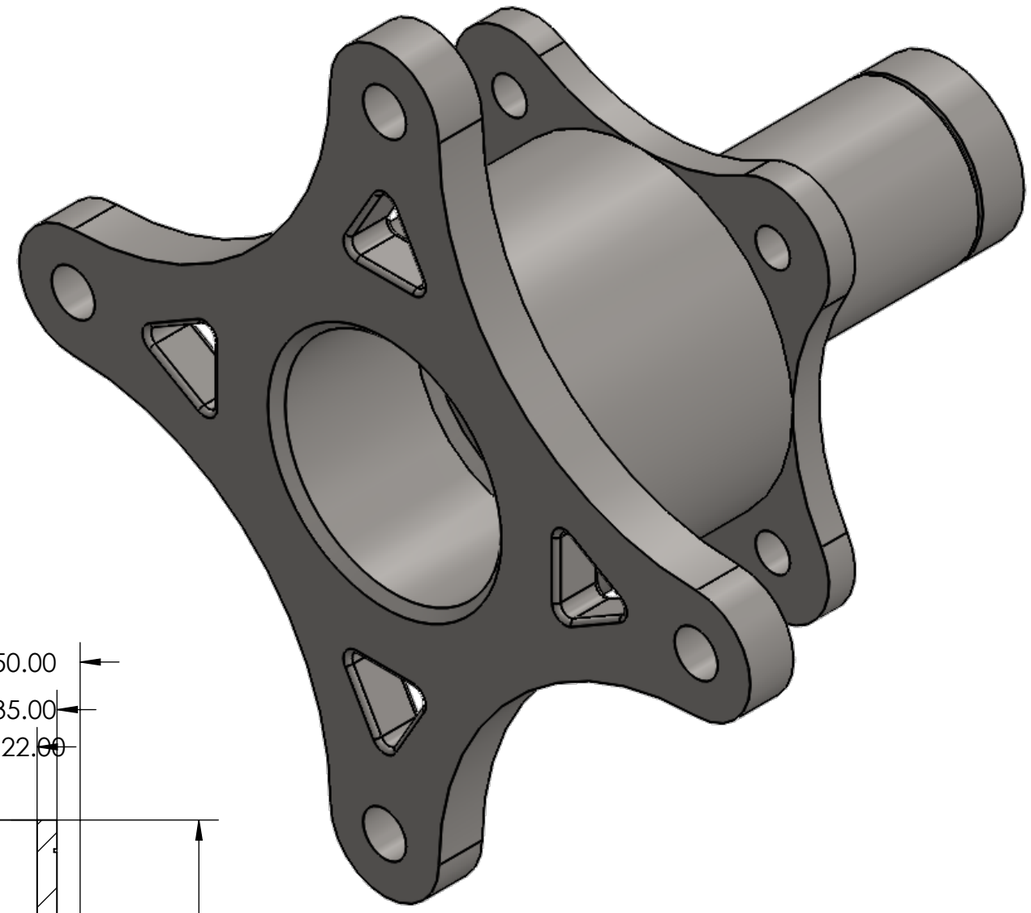

UNLESS OTHERWISE SPECIFIED: DIMENSIONS ARE IN MILLIMETERS SURFACE FINISH: TOLERANCES: LINEAR: ANGULAR:	FINISH:		DEBURR AND BREAK SHARP EDGES	DO NOT SCALE DRAWING	REVISION	
	NAME	SIGNATURE	DATE	TITLE:		
DRAWN						
CHK'D						
APPV'D						
MFG						
Q.A				MATERIAL:	DWG NO. Rear Rotor	A3
				WEIGHT:	SCALE:1:2	SHEET 1 OF 1

SOLIDWORKS Educational Product. For Instructional Use Only.

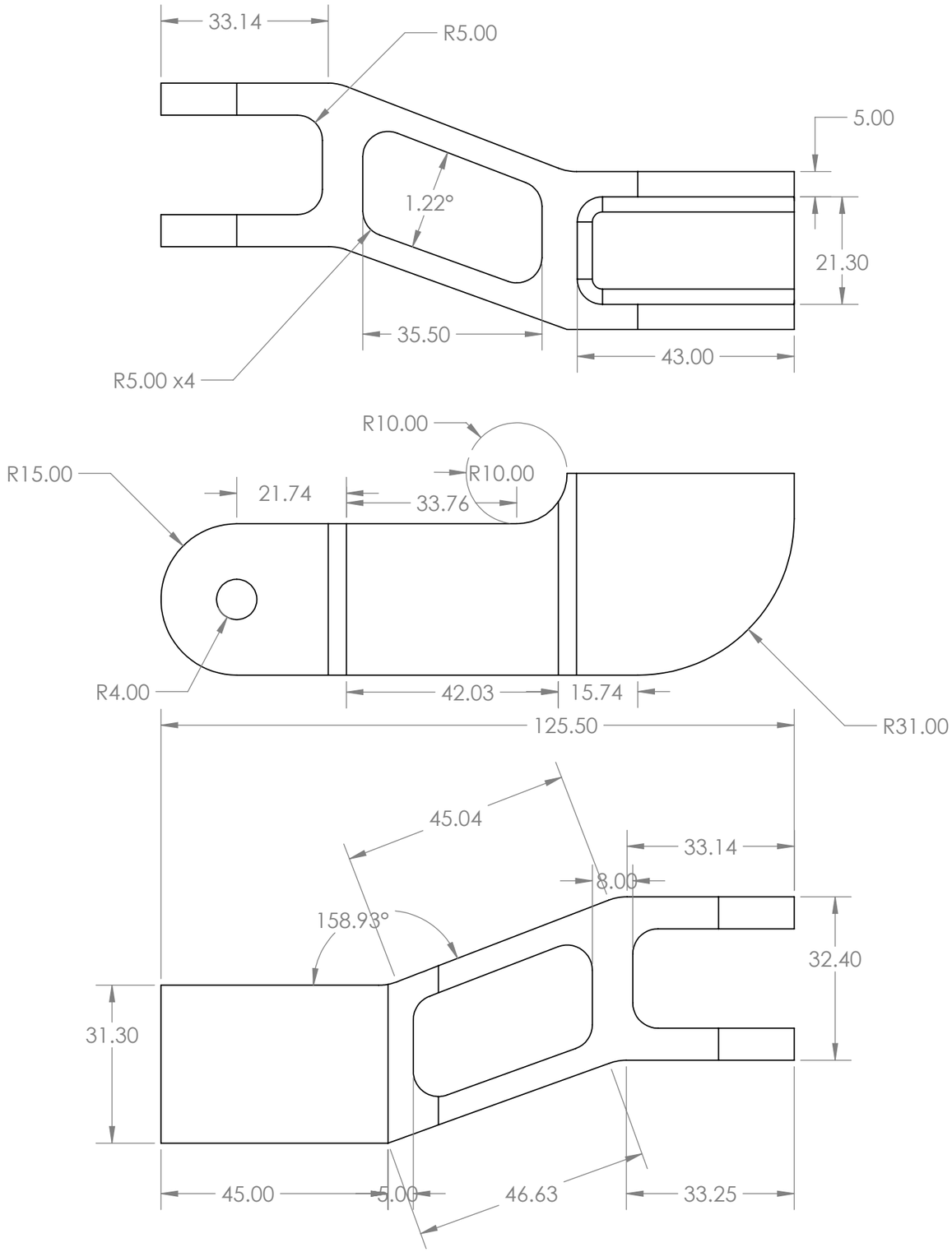

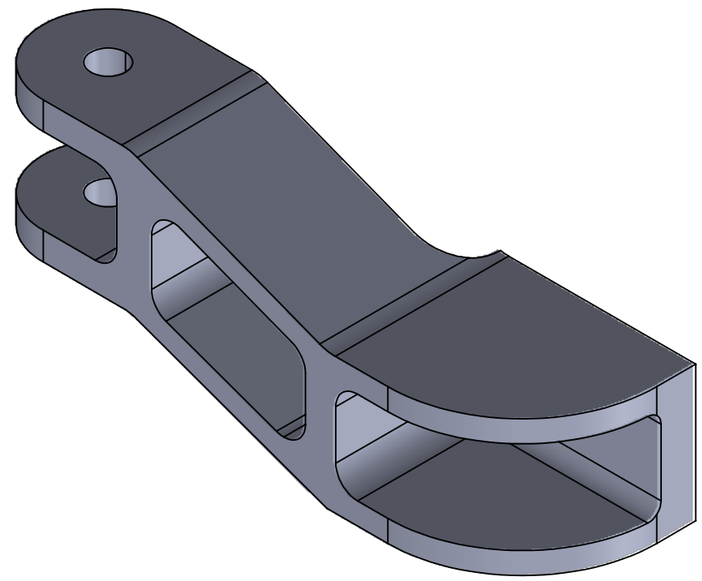

UNLESS OTHERWISE SPECIFIED: DIMENSIONS ARE IN MILLIMETERS SURFACE FINISH: TOLERANCES: LINEAR: ANGULAR:	FINISH:	DEBURR AND BREAK SHARP EDGES	DO NOT SCALE DRAWING	REVISION

	NAME	SIGNATURE	DATE
DRAWN			
CHK'D			
APPV'D			
MFG			
Q.A			

MATERIAL:

WEIGHT:

TITLE:

Steering Arm (front)

DWG NO. A3

SCALE:1:1

SHEET 1 OF 1

SOLIDWORKS Educational Product. For Instructional Use Only.

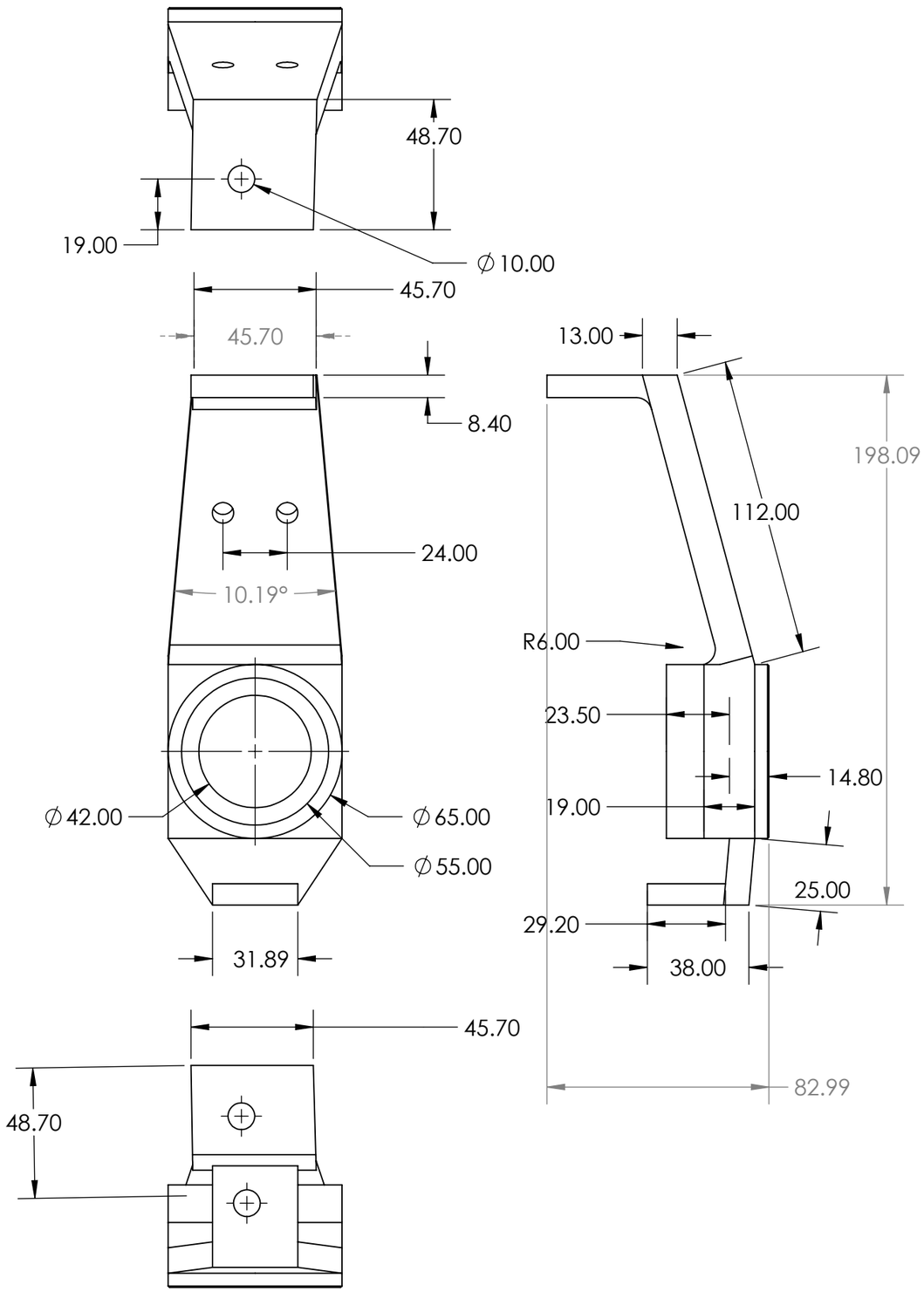

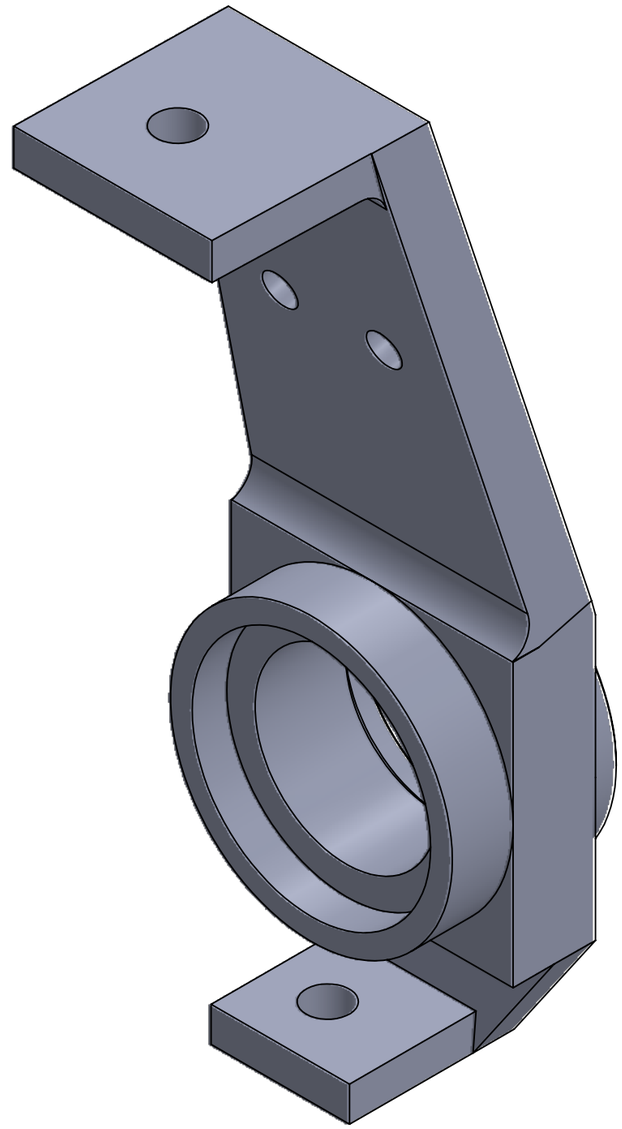

UNLESS OTHERWISE SPECIFIED: DIMENSIONS ARE IN MILLIMETERS SURFACE FINISH: TOLERANCES: LINEAR: ANGULAR:	FINISH:			DEBURR AND BREAK SHARP EDGES	DO NOT SCALE DRAWING		REVISION
	NAME	SIGNATURE	DATE		TITLE: Upright (Rear)		
DRAWN							
CHK'D							
APPV'D							
MFG							
Q.A				MATERIAL:	DWG NO.		A3
				WEIGHT:	SCALE:1:2	SHEET 1 OF 1	

SOLIDWORKS Educational Product. For Instructional Use Only.

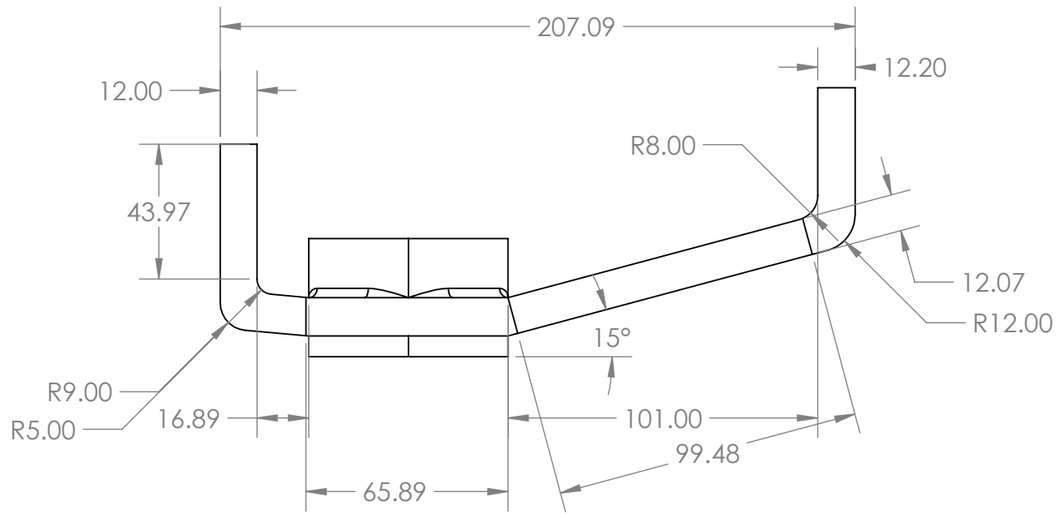

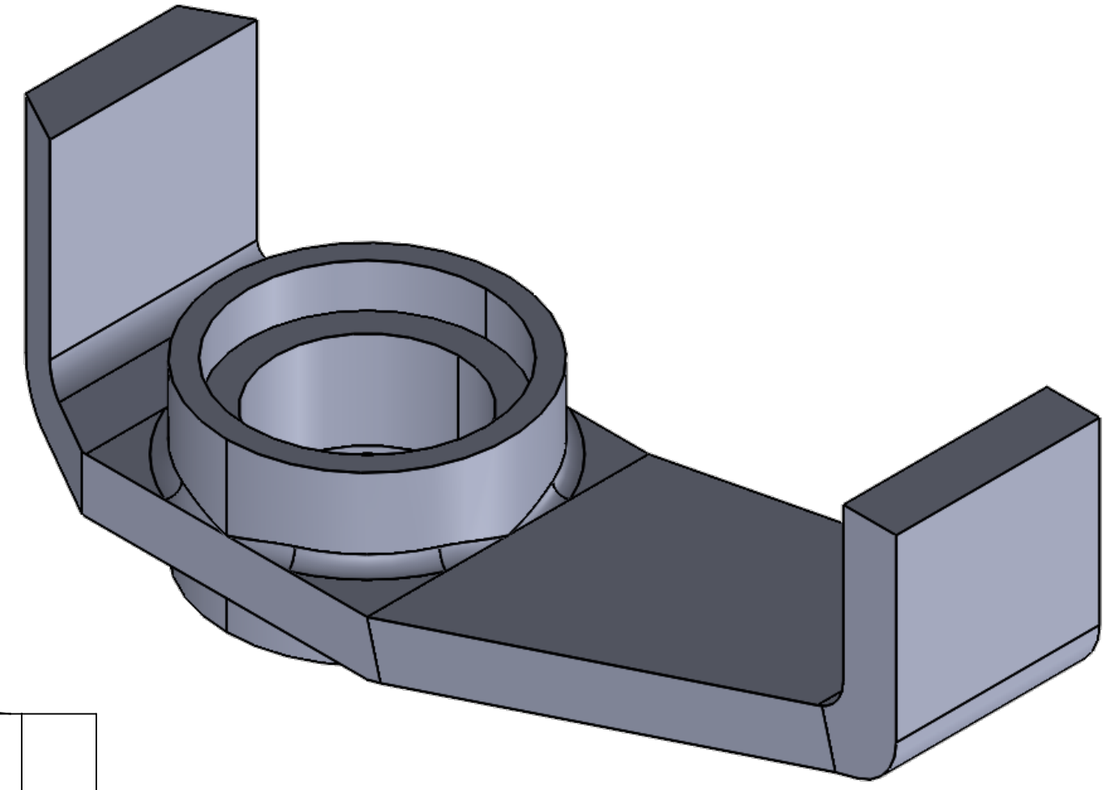

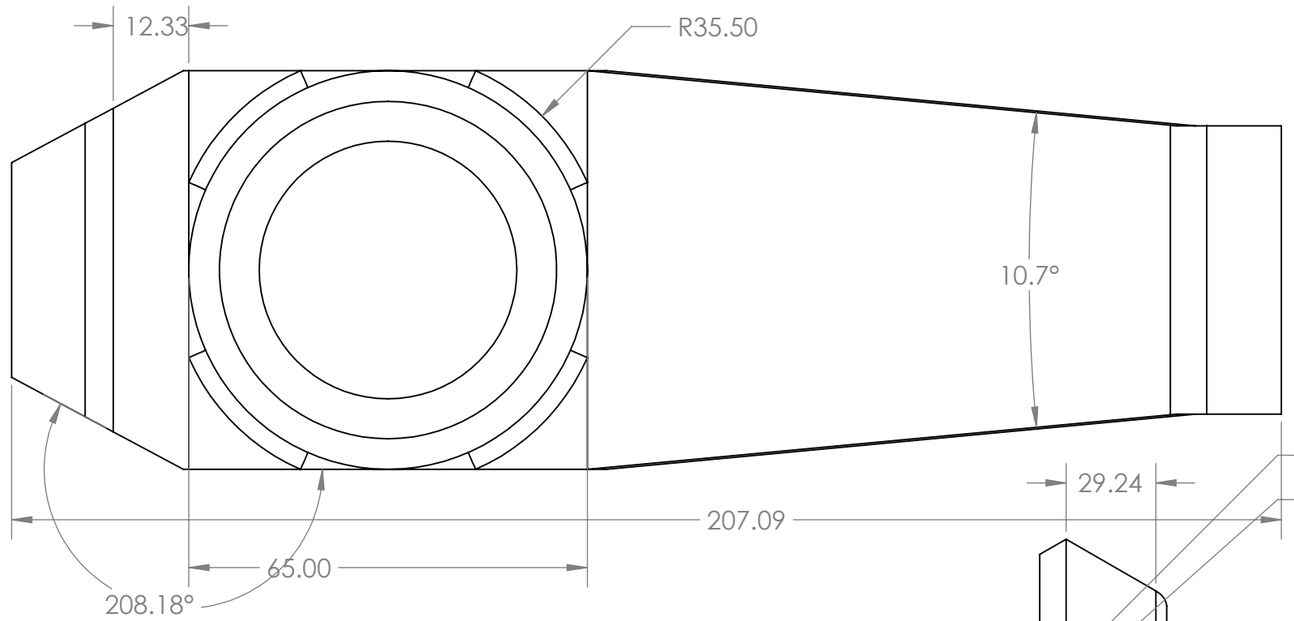

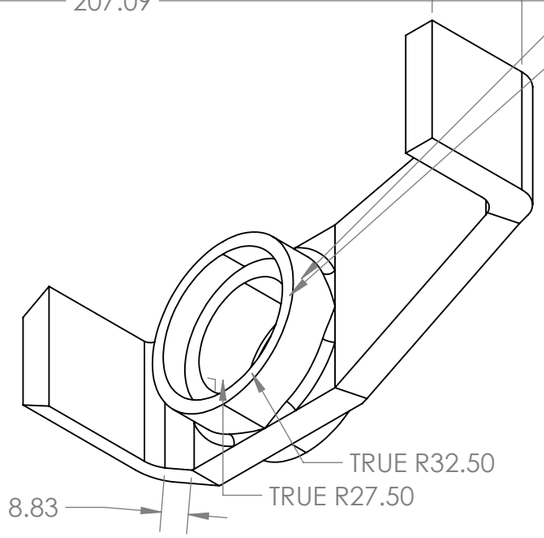

UNLESS OTHERWISE SPECIFIED: DIMENSIONS ARE IN MILLIMETERS SURFACE FINISH: TOLERANCES: LINEAR: ANGULAR:	FINISH:			DEBURR AND BREAK SHARP EDGES		DO NOT SCALE DRAWING	REVISION
	NAME	SIGNATURE	DATE			TITLE:	
DRAWN							
CHK'D							
APPV'D							
MFG							
Q.A				MATERIAL:		DWG NO. upright-front	A3
				WEIGHT:		SCALE:1:2	SHEET 1 OF 1

SOLIDWORKS Educational Product. For Instructional Use Only.

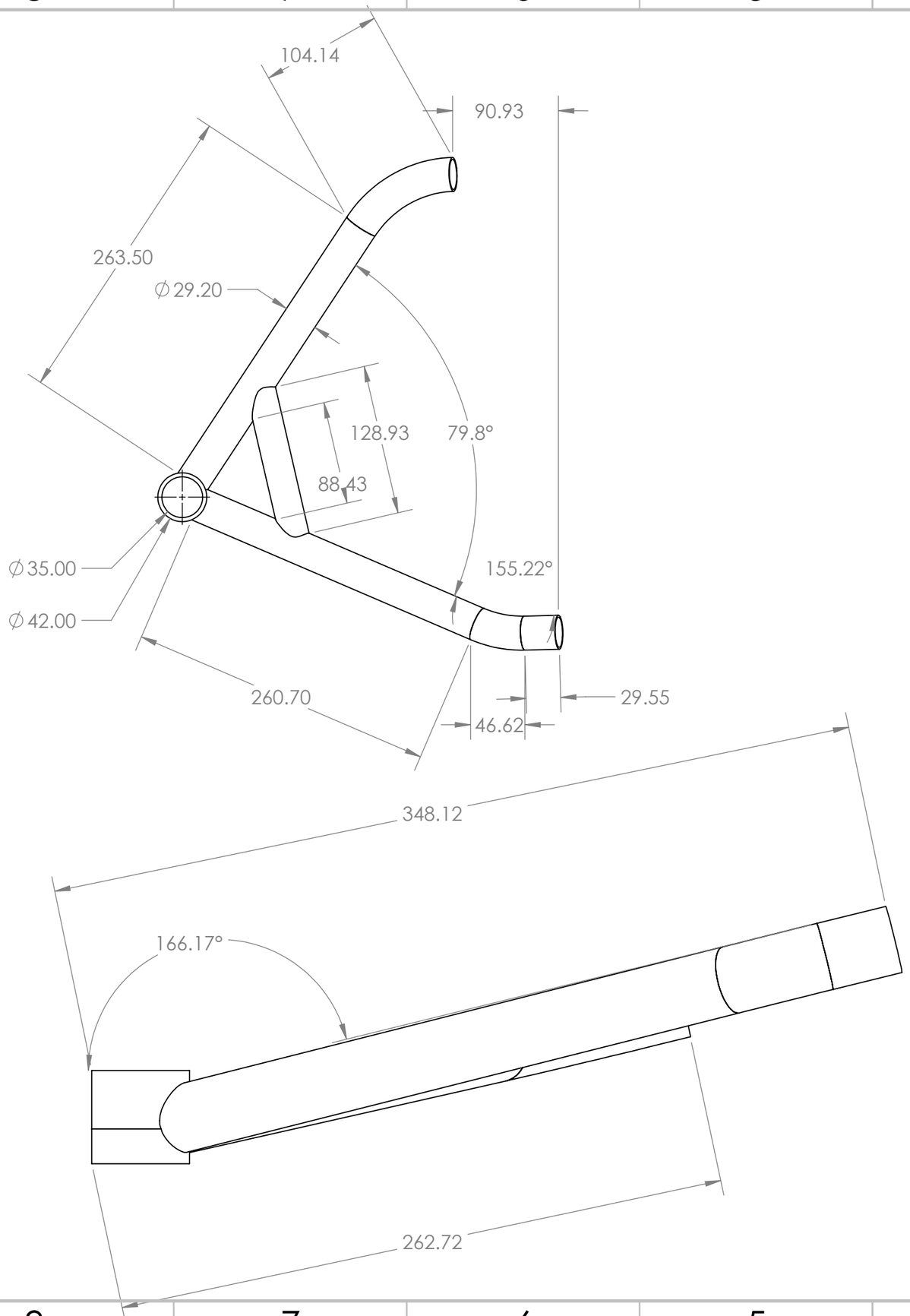

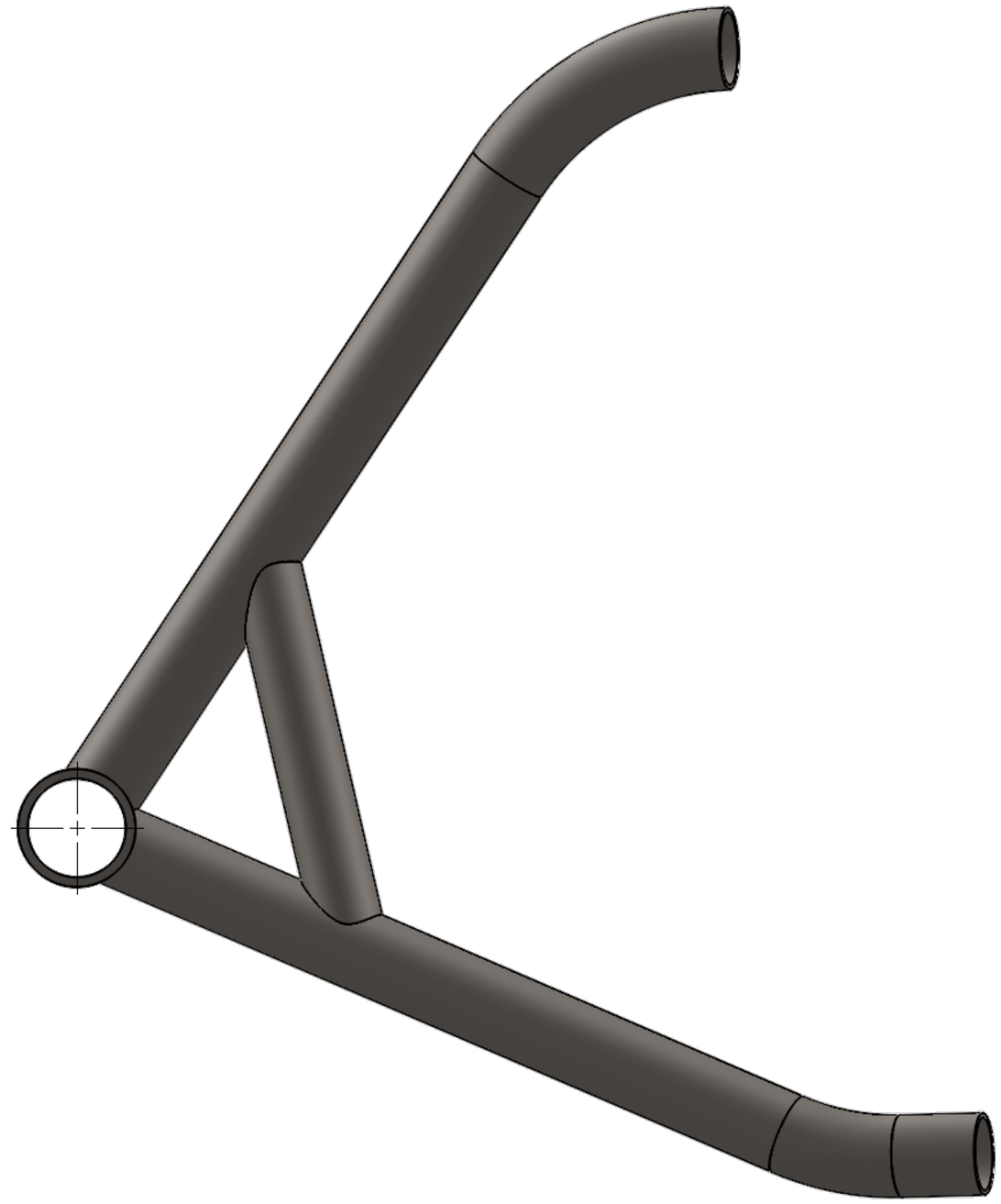

UNLESS OTHERWISE SPECIFIED: DIMENSIONS ARE IN MILLIMETERS SURFACE FINISH: TOLERANCES: LINEAR: ANGULAR:	FINISH:			DEBURR AND BREAK SHARP EDGES	DO NOT SCALE DRAWING	REVISION	
	NAME	SIGNATURE	DATE		TITLE: Suspension Arm (Rear)		
DRAWN							
CHK'D							
APPV'D							
MFG							
Q.A				MATERIAL:	DWG NO.		A3
				WEIGHT:	SCALE:1:5	SHEET 1 OF 1	

SOLIDWORKS Educational Product. For Instructional Use Only.

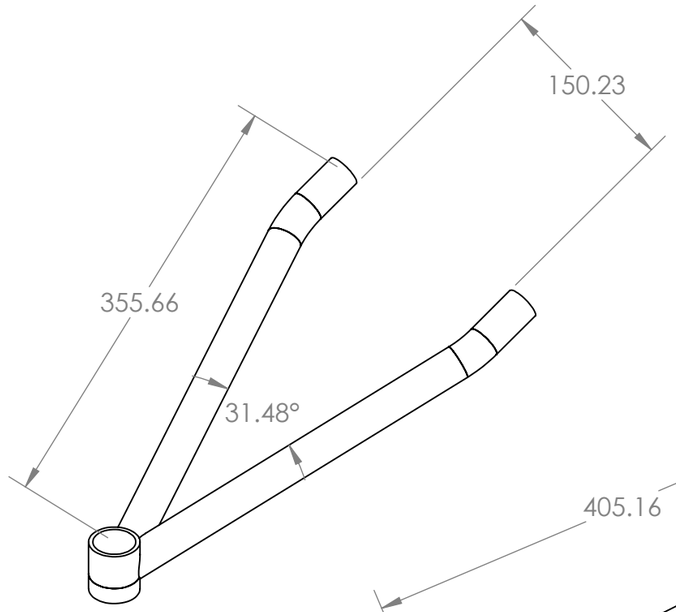

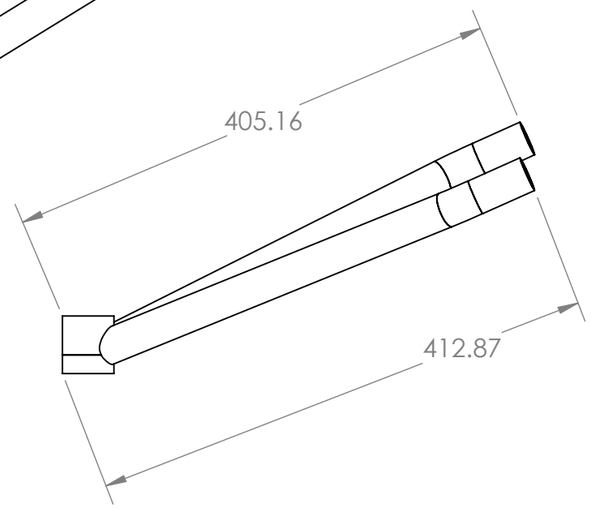

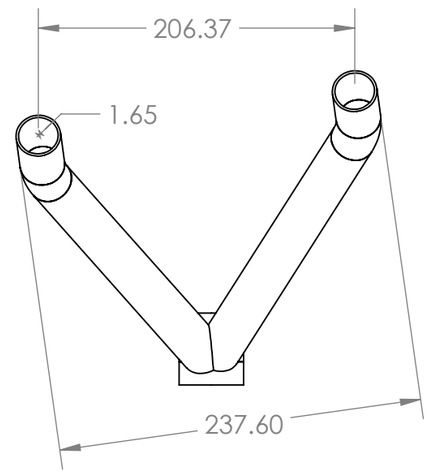

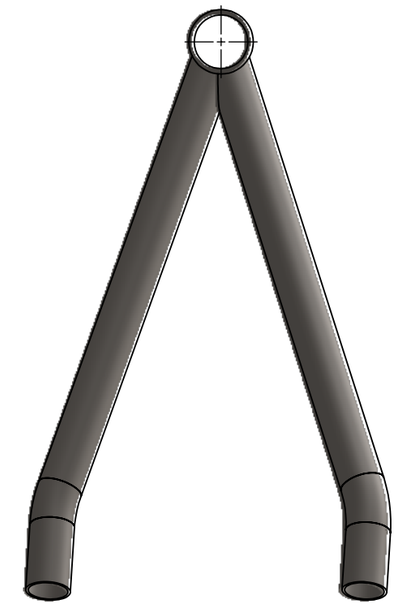

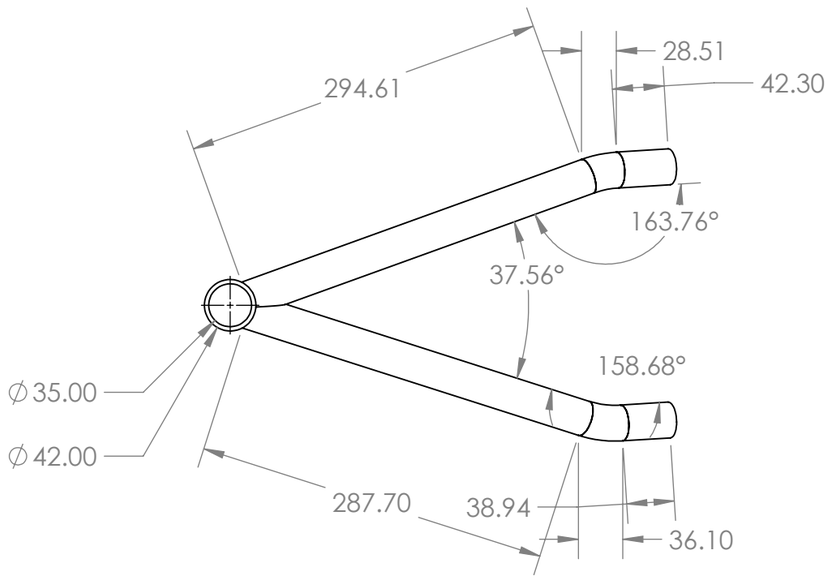

UNLESS OTHERWISE SPECIFIED: DIMENSIONS ARE IN MILLIMETERS SURFACE FINISH: TOLERANCES: LINEAR: ANGULAR:	FINISH:			DEBURR AND BREAK SHARP EDGES	DO NOT SCALE DRAWING	REVISION
	NAME	SIGNATURE	DATE		TITLE: lower suspension arm (front)	
DRAWN						
CHK'D						
APPV'D						
MFG						
Q.A				MATERIAL:	DWG NO.	A3
				WEIGHT:	SCALE:1:5	SHEET 1 OF 1

SOLIDWORKS Educational Product. For Instructional Use Only.

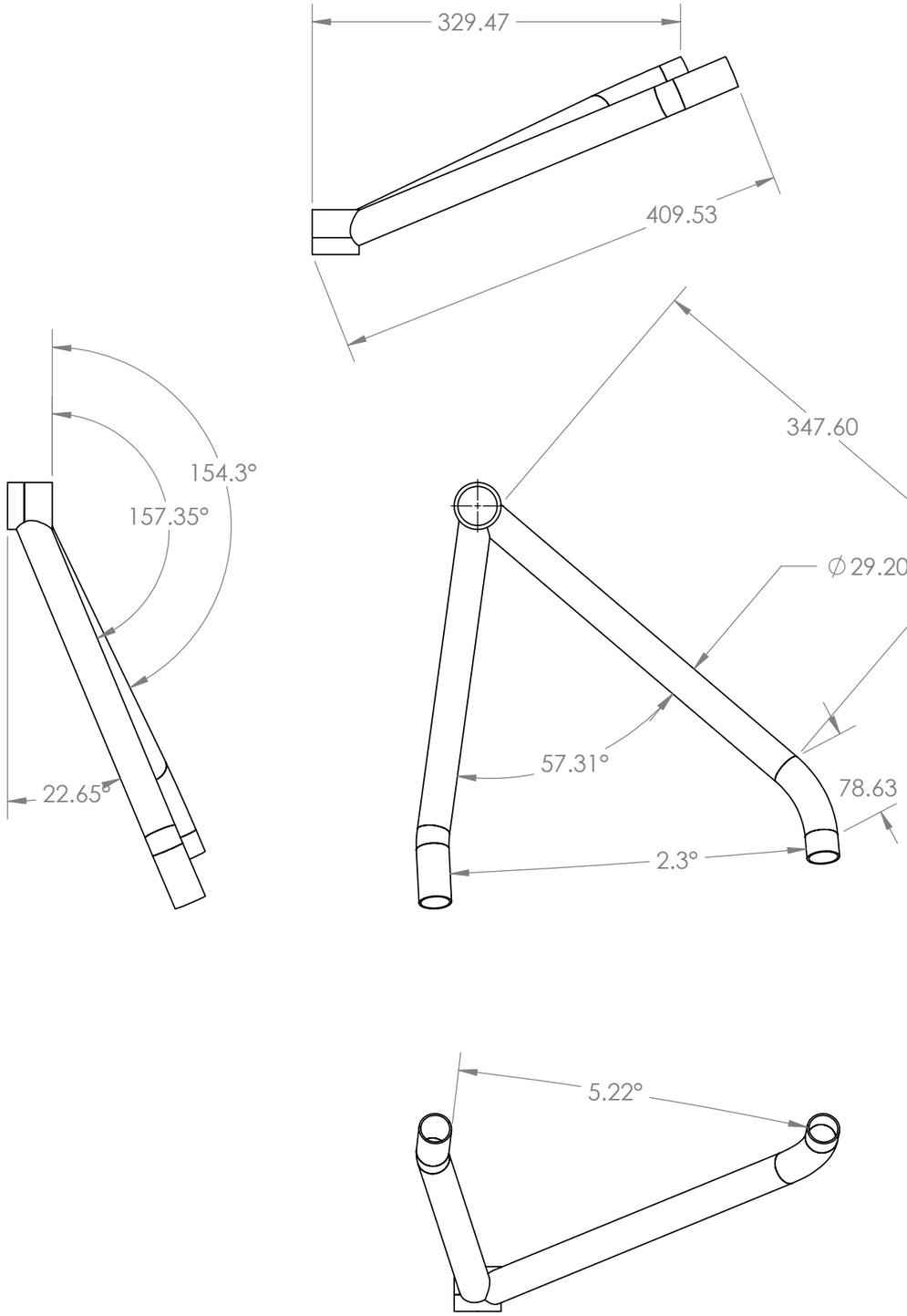

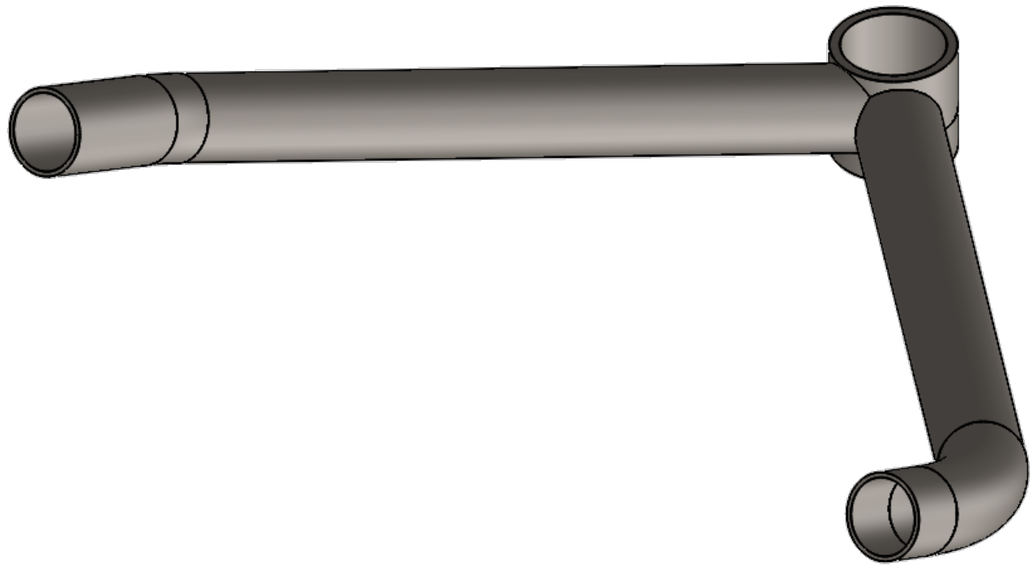

UNLESS OTHERWISE SPECIFIED: DIMENSIONS ARE IN MILLIMETERS SURFACE FINISH: TOLERANCES: LINEAR: ANGULAR:	FINISH:			DEBURR AND BREAK SHARP EDGES	DO NOT SCALE DRAWING	REVISION
	NAME	SIGNATURE	DATE		TITLE: lower suspension arm (rear)	
DRAWN						
CHK'D						
APPV'D						
MFG						
Q.A				MATERIAL:	DWG NO.	A3
				WEIGHT:	SCALE:1:5	SHEET 1 OF 1

SOLIDWORKS Educational Product. For Instructional Use Only.

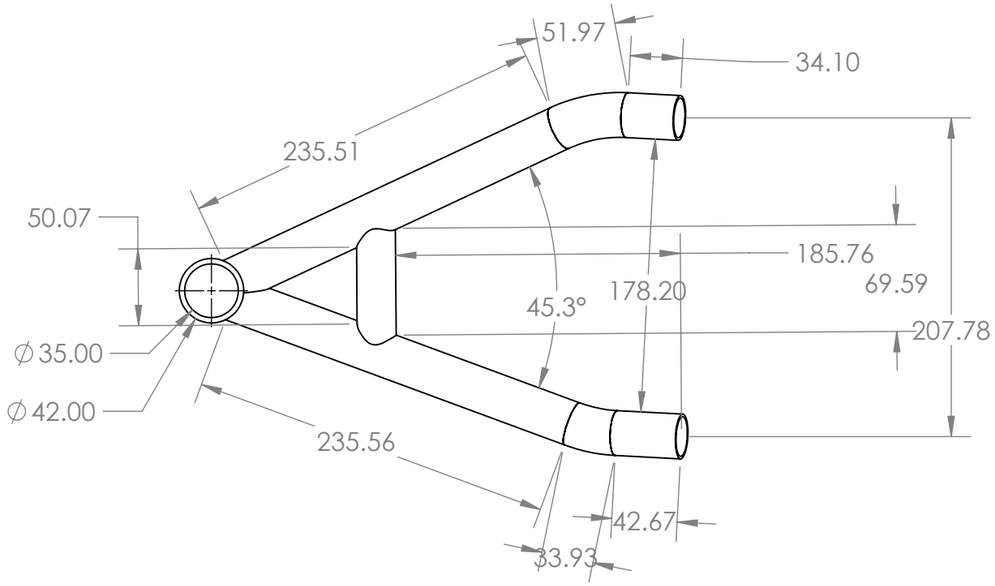

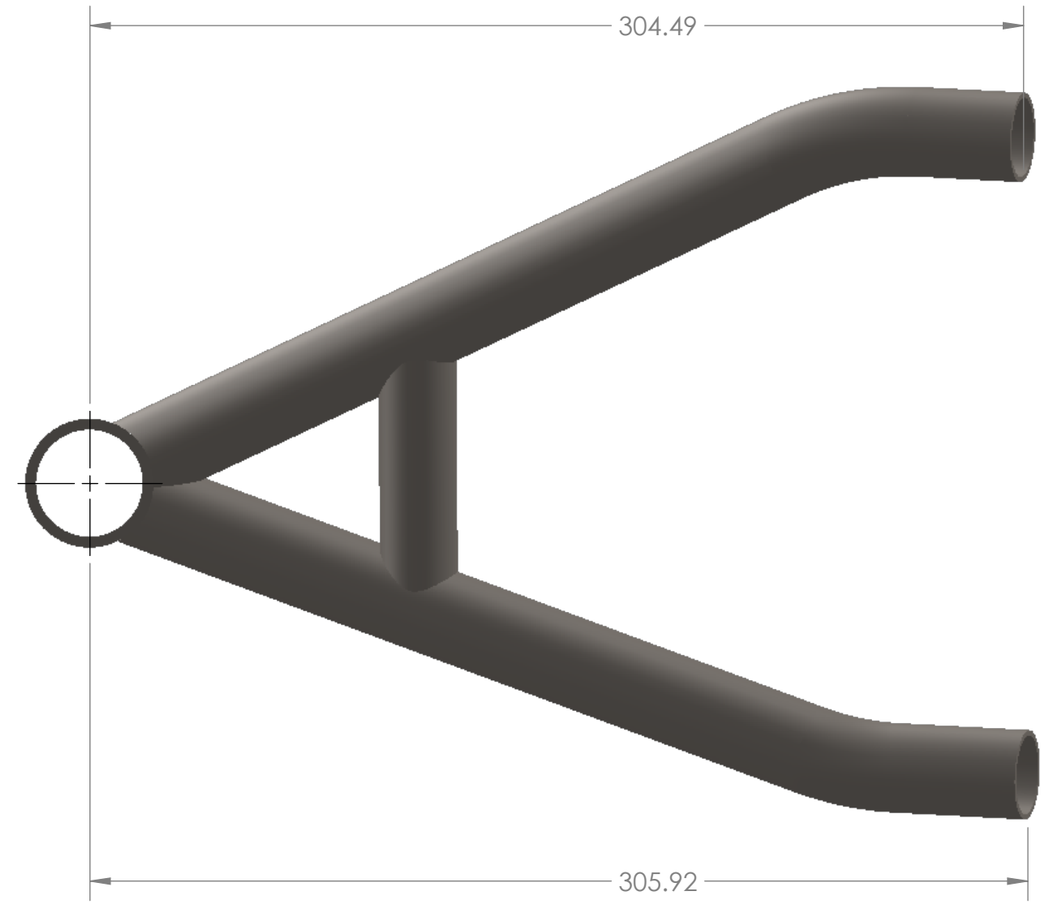

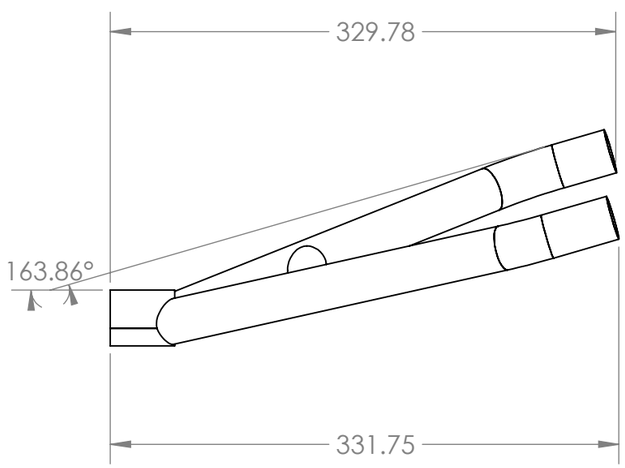

UNLESS OTHERWISE SPECIFIED: DIMENSIONS ARE IN MILLIMETERS SURFACE FINISH: TOLERANCES: LINEAR: ANGULAR:	FINISH:			DEBURR AND BREAK SHARP EDGES	DO NOT SCALE DRAWING	REVISION
	NAME	SIGNATURE	DATE		TITLE: Steering arm (front)	
DRAWN						
CHK'D						
APPV'D						
MFG						
Q.A				MATERIAL:	DWG NO.	A3
				WEIGHT:	SCALE:1:5	SHEET 1 OF 1

SOLIDWORKS Educational Product. For Instructional Use Only.

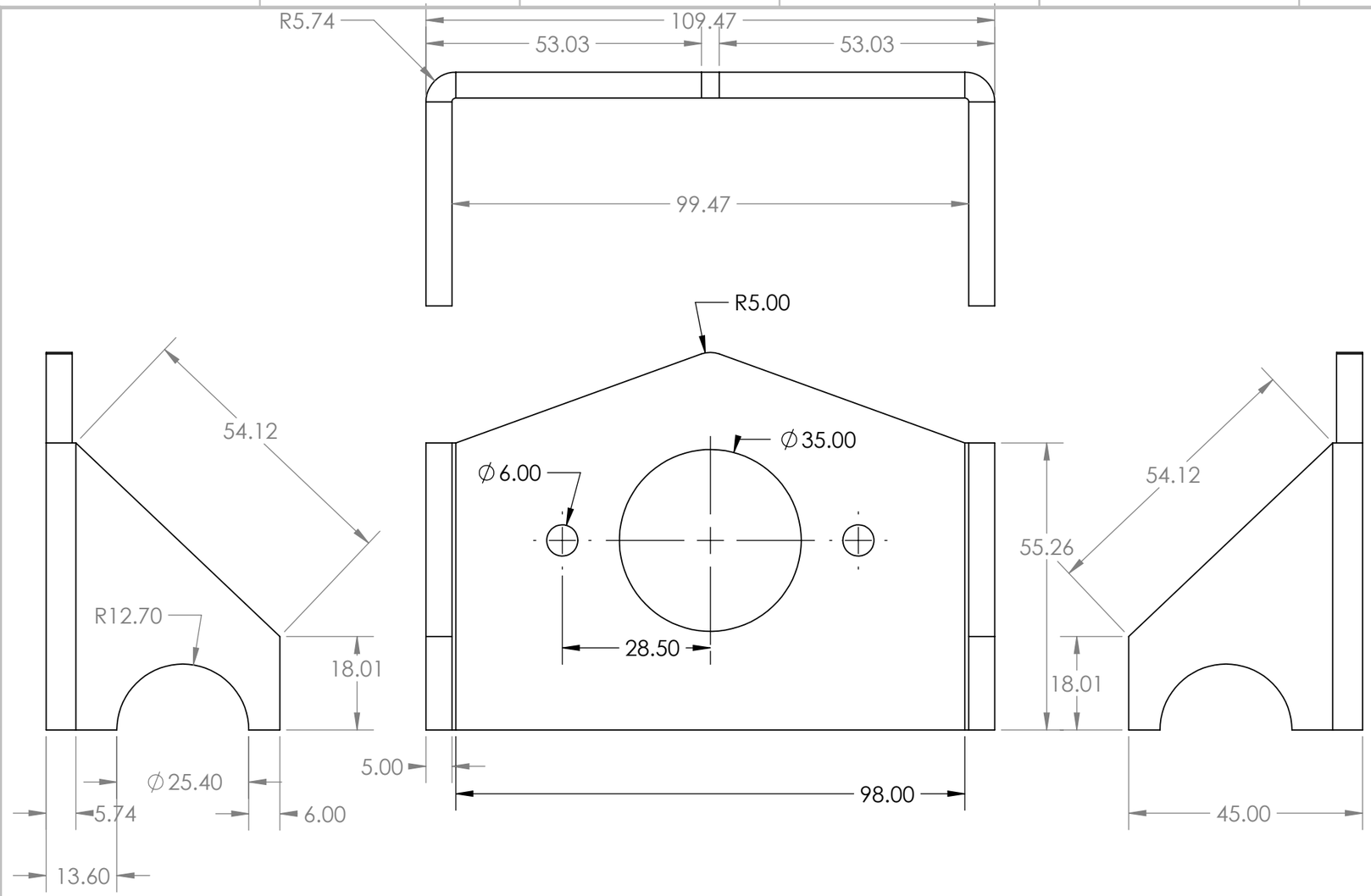

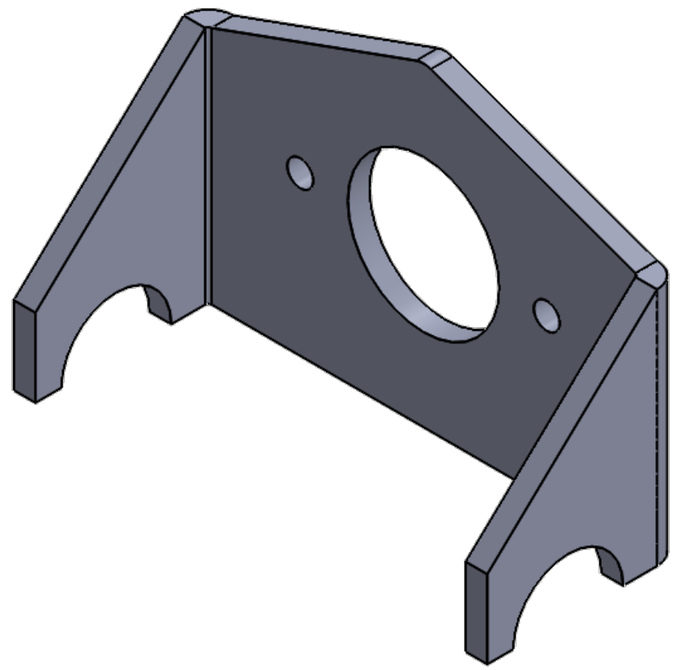

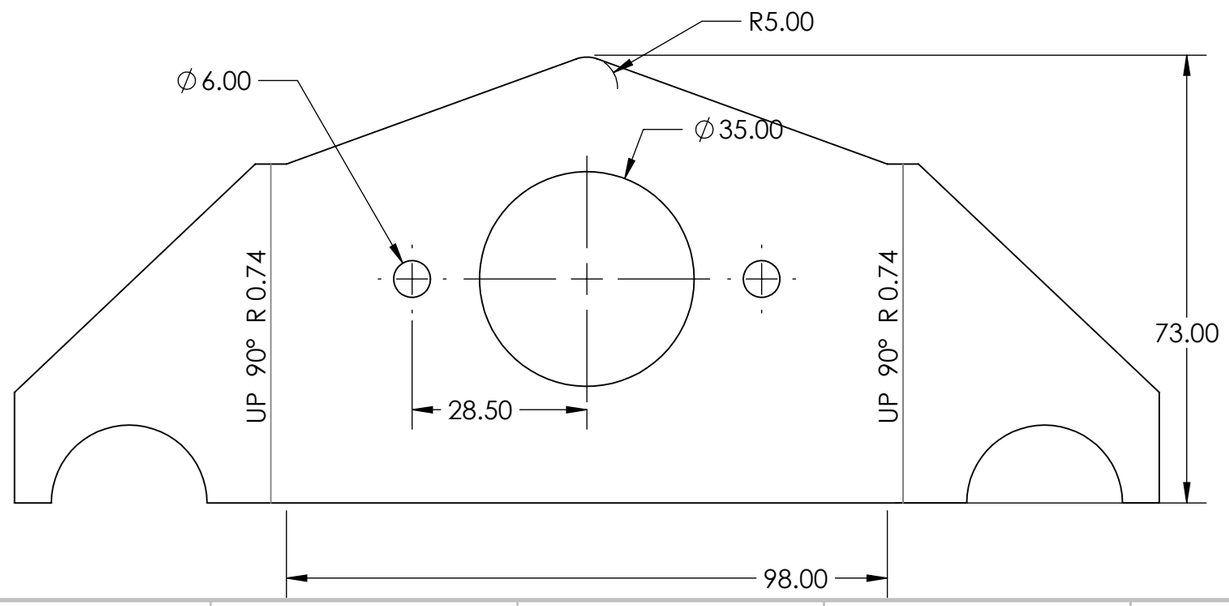

UNLESS OTHERWISE SPECIFIED: DIMENSIONS ARE IN MILLIMETERS SURFACE FINISH: TOLERANCES: LINEAR: ANGULAR:	FINISH:			DEBURR AND BREAK SHARP EDGES	DO NOT SCALE DRAWING	REVISION
	NAME	SIGNATURE	DATE		TITLE: Master Cylinder mount	
DRAWN						
CHK'D						
APPV'D						
MFG						
Q.A				MATERIAL:	DWG NO.	A3
				WEIGHT:	SCALE:1:1	SHEET 1 OF 1

SOLIDWORKS Educational Product. For Instructional Use Only.

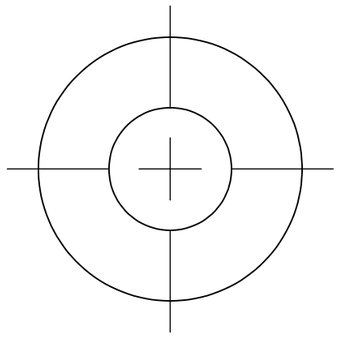

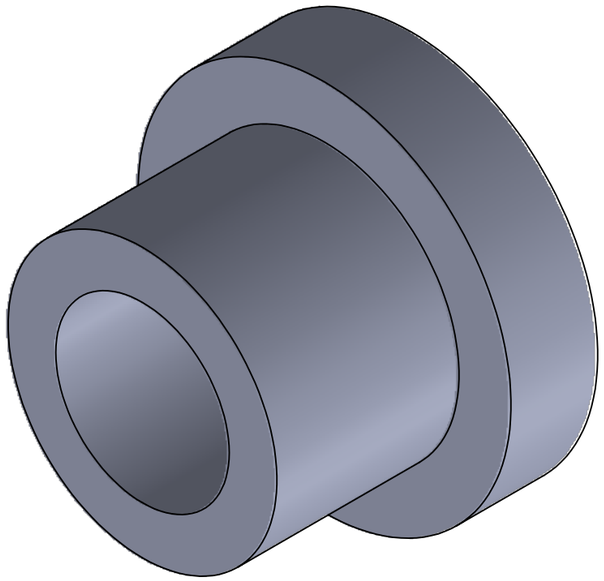

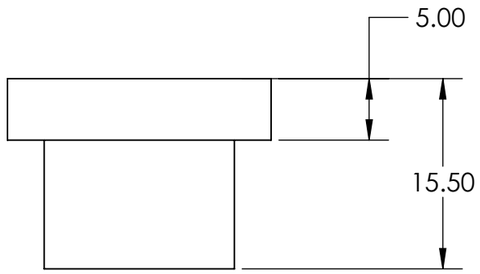

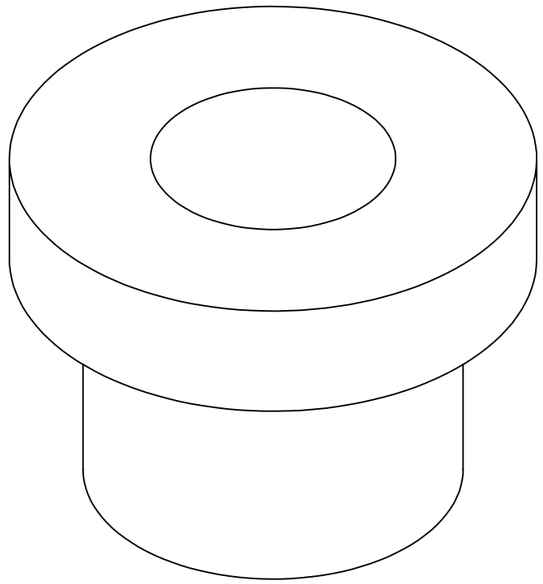

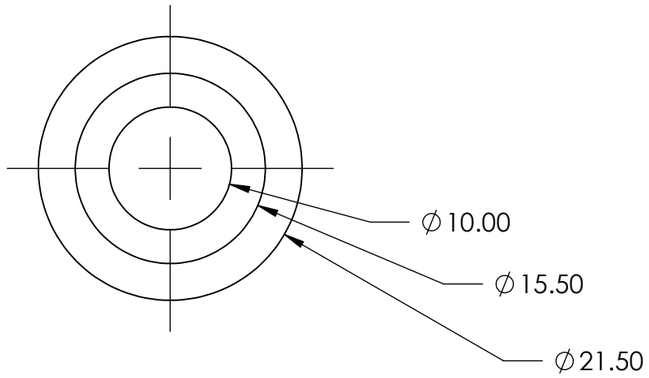

UNLESS OTHERWISE SPECIFIED: DIMENSIONS ARE IN MILLIMETERS SURFACE FINISH: TOLERANCES: LINEAR: ANGULAR:	FINISH:			DEBURR AND BREAK SHARP EDGES	DO NOT SCALE DRAWING	REVISION
	NAME	SIGNATURE	DATE		TITLE:	
DRAWN						
CHK'D						
APPV'D						
MFG						
Q.A				MATERIAL:	DWG NO. a-arm bushing	A3
				WEIGHT:	SCALE:2:1	SHEET 1 OF 1

SOLIDWORKS Educational Product. For Instructional Use Only.

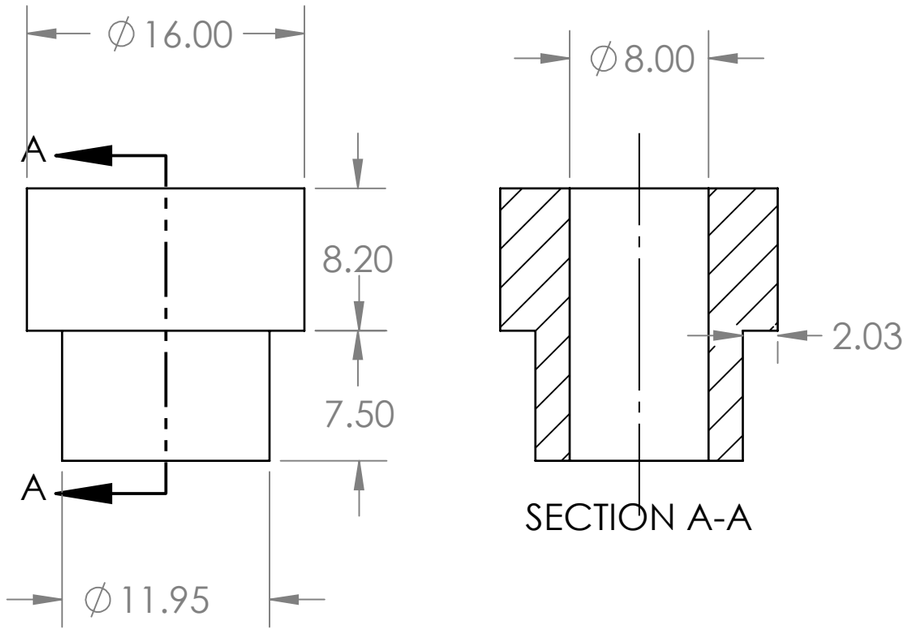

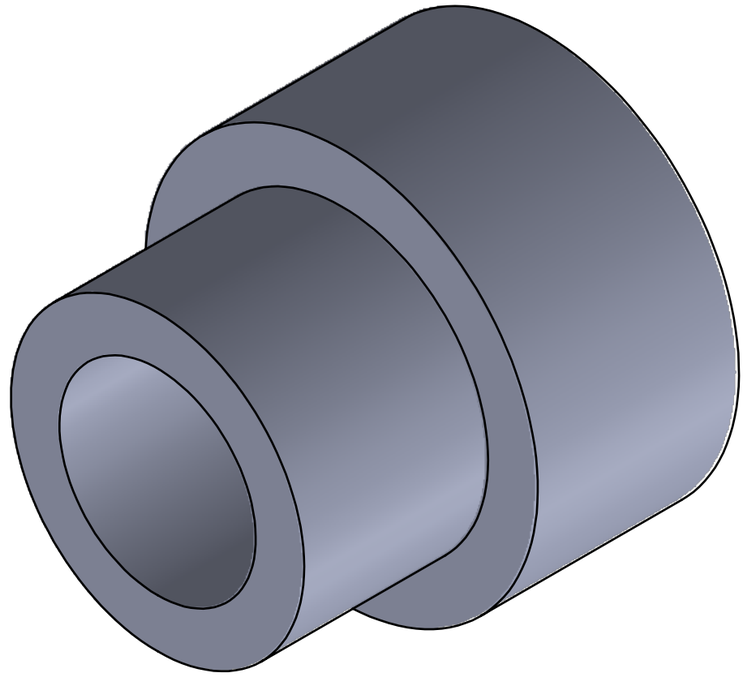

UNLESS OTHERWISE SPECIFIED: DIMENSIONS ARE IN MILLIMETERS SURFACE FINISH: TOLERANCES: LINEAR: ANGULAR:		FINISH:			DEBURR AND BREAK SHARP EDGES	DO NOT SCALE DRAWING	REVISION
	NAME	SIGNATURE	DATE				TITLE:
DRAWN							
CHK'D							
APPV'D							
MFG							
Q.A				MATERIAL:		DWG NO. Spacer	A4
				WEIGHT:		SCALE:2:1	SHEET 1 OF 1

SOLIDWORKS Educational Product. For Instructional Use Only.

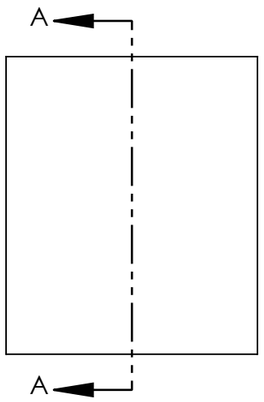

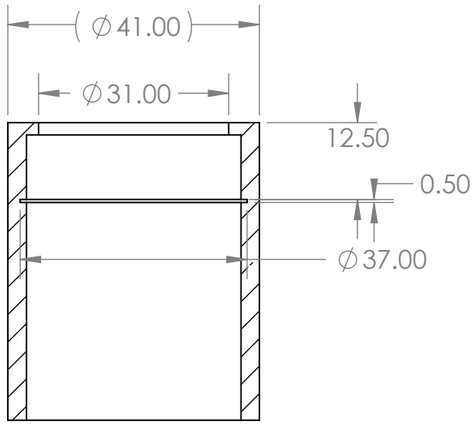

SECTION A-A

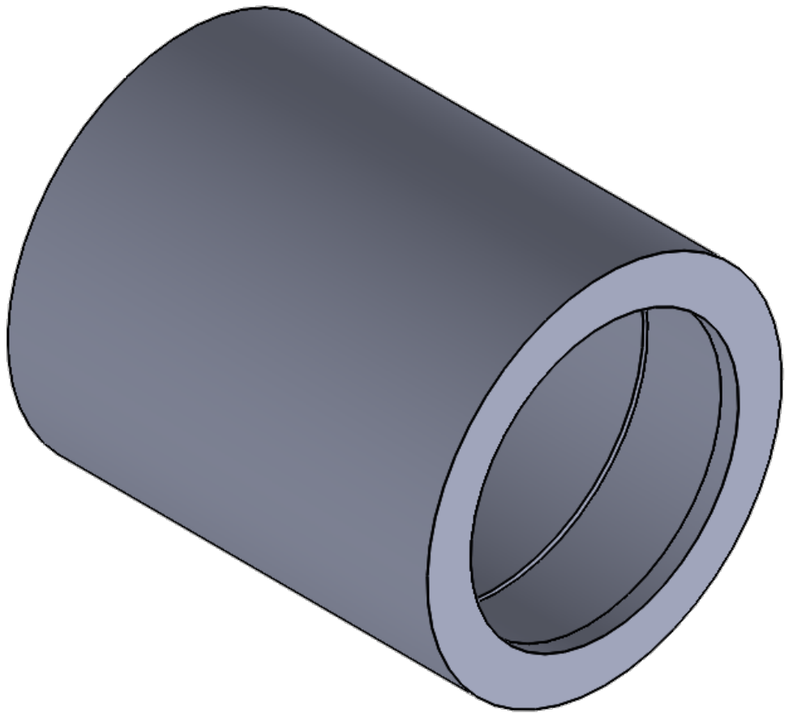

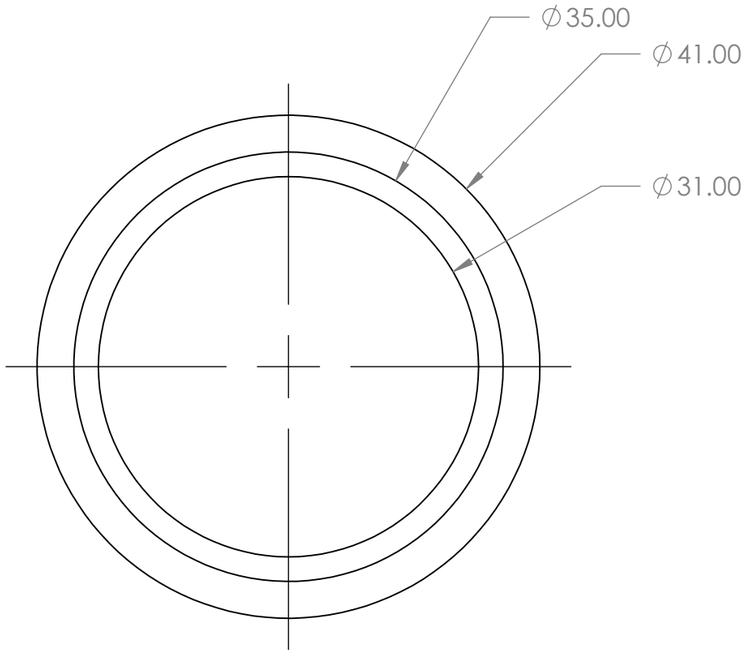

UNLESS OTHERWISE SPECIFIED: DIMENSIONS ARE IN MILLIMETERS SURFACE FINISH: TOLERANCES: LINEAR: ANGULAR:	FINISH:				DEBURR AND BREAK SHARP EDGES	DO NOT SCALE DRAWING	REVISION
	NAME	SIGNATURE	DATE			TITLE: a-arm collar	
DRAWN							
CHK'D							
APPV'D							
MFG							
Q.A				MATERIAL:		DWG NO.	A3
				WEIGHT:		SCALE:1:1	SHEET 1 OF 1

SOLIDWORKS Educational Product. For Instructional Use Only.